KERNLOCHBOHRER®
PROFESSIONAL POWER TOOLS



Operating instructions

Building dryer
BT60

BA-05-000002-04-EN

Scope of application

These operating instructions only apply to the machine labelled on the cover sheet.

Check the machine model using the machine's rating plate.

Original instructions / translation of the original instructions

In accordance with the EU Machinery Directive, the German version of these operating instructions is the original instructions.

Copies in other languages are translations of the original instructions.

Kernlochbohrer GmbH

Geigersbühlweg 52

72663 Großbettlingen

Germany

Phone: +49 (0)70 22 / 50 34 900

E-mail: info@kernlochbohrer.com

Internet: http://www.kernlochbohrer.com

Kernlochbohrer GmbH

This documentation is protected by copyright.

All rights to this documentation, in particular the right of reproduction, distribution and translation, are reserved by Kernlochbohrer GmbH, even in the case of applications for industrial property rights. No part of this documentation may be reproduced in any form by any means, electronic or mechanical, or processed, duplicated or distributed using electronic systems without the express written permission of Kernlochbohrer GmbH.

Subject to errors and technical changes.

Kernlochbohrer GmbH is not liable for any errors in this documentation. Liability for direct or indirect damages arising in connection with the delivery or use of this documentation is excluded to the extent permitted by law. Furthermore, Kernlochbohrer GmbH cannot be held liable for damages resulting from the infringement of patent and other rights of third parties.

The function of the machine is limited to the functions described in the associated technical documentation.

Table of contents

1 Information and support 7
1.1 Thanks to the buyer 7
1.2 Use of the operating instructions 7
1.3 Changes 7
1.4 Explanation of symbols 8
1.5 Guarantee 8
1.6 Environmental protection 9
1.6.1 Disposal of the product 9
1.6.2 Disposal of the packaging 9
1.7 Service 10
2 Security 11
2.1 General information 11
2.2 Intended use 11
2.3 Safety regulations for the operator 12
2.3.1 Organisational safety measures 12
2.3.2 Changes to the machine 12
2.3.3 Spare parts 13
2.3.4 Personnel 13
2.4 Safety regulations for staff 14
2.4.1 Safe behaviour 14
2.4.2 Safe operation 15
2.5 Safety during maintenance 16
2.5.1 General information 16
2.5.2 Cleaning 16
3 Technical data 17
4 Machine description 18
4.1 Machine components and operating devices 18
4.2 Display 20
4.2.1 On/off button 21

4.2.2 Plus and minus button 21
4.2.3 "Airflow speed" button 21
4.2.4 Operating hours counter 21
4.3 Circuit diagram 22
4.4 Scope of delivery 23
5 Utilisation of the machine 24
5.1 Specific precautions 24
5.1.1 Building dryer 24
5.1.2 Machines with flammable refrigerant 25
5.2 Transport of the machine 26
5.3 Unpacking the machine 26
5.4 Commissioning the machine 26
5.5 Working with the machine 28
5.5.1 Visual inspection of the machine 28
5.5.2 Electrical connection 29
5.5.3 Switch on the machine 30
5.5.4 Switch off the machine 32
5.5.5 Store the machine 32
6 Maintenance 33
6.1 Notes on proper maintenance 33
6.2 Maintenance and inspection plan 33
6.3 Inspection and maintenance 34
6.3.1 Empty the condensate container 34
6.3.2 Cleaning the machine 35
6.3.3 Clean the air filter 36
7 Troubleshooting 37
8 EU Declaration of Conformity 38

1 Information and support

1.1 Thanks to the buyer

Thank you for purchasing a machine from Kernlochbohrer GmbH.

Please read the operating instructions carefully and observe the safety instructions. By following the operating instructions, you will be able to fully utilise the outstanding performance of our product.

If you have any questions regarding the operation of the machine, please contact Kernlochbohrer GmbH directly. We are available to answer your questions at any time.

1.2 Use of the operating instructions

The machine is intended for professional use and may only be operated by trained personnel. Strictly adhere to the instructions in the operating instructions.

If the operating instructions are not observed, which may result in injury or damage to the machine, our company declines all responsibility.

The operating instructions are essential for using the machine. The operating instructions must therefore always be kept in the vicinity of the machine and be accessible to the intended personnel at all times.

In addition to the operating instructions, the generally applicable and local regulations on accident prevention and environmental protection must be provided; compliance with these regulations must be checked regularly.

1.3 Changes

Kernlochbohrer GmbH reserves the right to change the design and appearance of the products and their operating instructions. Future changes to the operating instructions will be made without prior notice.

1.4 Explanation of symbols



The symbol draws your attention to dangers that you must be aware of when carrying out the following work in order to avoid injury to yourself, other persons or damage to property.

📖 Cross-reference to another section in the operating instructions.

☑ Prerequisite for an action.

☒ Action to be performed.

↳ Behaviour of the machine that is to be expected as a result of the preceding action.

ⓘ Background information or reference to special features.

1.5 Guarantee

In accordance with Kernlochbohrer GmbH's general terms of delivery, a warranty period of 12 months applies to material defects in business transactions with companies (proof by invoice or delivery note).

Damage caused by natural wear and tear, overloading or improper handling is excluded.

Damage caused by material or manufacturer defects will be rectified free of charge by repair or replacement. Complaints can only be recognised if the device is sent to Kernlochbohrer GmbH undismantled.

Wear parts are excluded from the warranty.

1.6 Environmental protection

1.6.1 Disposal of the product

Follow national regulations on environmentally friendly disposal and recycling of used machines and accessories.

For EU countries only:

Do not dispose of the machine with household waste! In accordance with European Directive 2012/19/EU on waste electrical and electronic equipment and its transposition into national law, used power tools must be collected separately and recycled in an environmentally friendly manner.

The propane refrigerant in the machine must be disposed of properly in accordance with national legislation by companies with the appropriate certification.

1.6.2 Disposal of the packaging

The packaging is made from recyclable materials. They must be disposed of in accordance with their labelling and municipal guidelines.

1.7 Service

Precise information and specific questions allow faults to be rectified quickly, make it easier to order spare parts and prevent incorrect deliveries.

Before contacting the service, please collect the following data first.

The model designation must be stated in all enquiries and orders. This information can be found on the rating plate of the machine.

In the event of malfunctions, further information is required: type and extent of the malfunction, accompanying circumstances, suspected cause.

When ordering spare parts, the following is required: Quantity and item number in the exploded drawing in these operating instructions.

Contact details:

Kernlochbohrer GmbH
Geigersbühlweg 52
72663 Großbettlingen
Germany
Phone: +49 (0)70 22 / 50 34 900
E-mail: info@kernlochbohrer.com
Internet: http://www.kernlochbohrer.com

2 Security

2.1 General information

The machine was built according to the state of the art and in compliance with the applicable laws, standards and safety regulations. Nevertheless, the use of the machine can result in hazards for the user or third parties as well as damage to the machine and other property.

The machine may only be used if it is in perfect working order and in accordance with its intended use and in a safe and hazard-conscious manner.

If the machine is damaged or malfunctions, switch it off immediately, secure it against being switched on again and repair it or arrange for it to be repaired.

2.2 Intended use

The machine is intended exclusively for dehumidifying the air in indoor spaces (such as building sites, cellars, garages).

The machine may only be used within the limits of its technical data. This information, for example performance data and ambient conditions, can be found in the "Technical data" chapter.

Any other use or use beyond this is considered improper use - risk of accident! Kernlochbohrer GmbH is not liable for any resulting damage. The risk is borne solely by the operator.

Intended use also includes observing the operating instructions and complying with the prescribed maintenance intervals.

2.3 Safety regulations for the operator

2.3.1 Organisational safety measures

The operating instructions must always be available for the operating and maintenance personnel. It must therefore always be kept at the machine's place of use.

The regulations on accident prevention and environmental protection applicable at the machine's place of use must also be available. The operator of the machine must regularly check compliance with these regulations.

The use of sound-emitting machines may be limited in time by national or local regulations.

The machine must not be operated in potentially explosive atmospheres.

All safety and danger notices on the machine must be legible and must not be removed.

The protective equipment required to operate the machine must be provided by the operator. The operator must ensure that the protective equipment is used properly by the personnel.

Operating and auxiliary materials, such as lubricants or cleaning agents, must be selected in such a way that the limit values for hazardous substances applicable at the place of use are complied with. The regulations for environmental protection and disposal applicable at the place of use must be complied with.

2.3.2 Changes to the machine

The operator may not make any modifications to the machine without written authorisation from Kernlochbohrer GmbH. If the operator carries out modifications without authorisation, the warranty becomes void. Kernlochbohrer GmbH is not liable for damage caused by unauthorised modifications.

2.3.3 Spare parts

Spare parts must comply with the properties defined by Kernlochbohrer GmbH. This is always guaranteed for spare parts supplied by Kernlochbohrer GmbH. Kernlochbohrer GmbH is not liable for damage caused by the use of unsuitable spare parts.

2.3.4 Personnel

All persons who are authorised to commission, operate and maintain the machine must have read and understood the operating instructions beforehand.

The machine may only be operated by persons who have been adequately instructed beforehand.

The machine may only be serviced by persons who have completed the appropriate specialised training for this activity.

Minors are not permitted to work with the machine. Young people over the age of 16 who are trained under supervision are exempt from this regulation.

2.4 Safety regulations for staff

2.4.1 Safe behaviour

All persons responsible for commissioning, operating and maintaining the machine must have read and understood the operating instructions beforehand.

The machine may only be operated by persons who have been adequately instructed beforehand.

The machine may only be serviced by persons who have completed the appropriate specialised training for this activity.

Minors are not permitted to work with the machine. Young people over the age of 16 who are trained under supervision are exempt from this regulation.

Any work on and with the machine that could jeopardise safety must be avoided.

All safety and danger notices on the machine must be legible and must not be removed.

2.4.2 Safe operation

Operating the machine requires the full concentration and ability of the personnel. Persons who are overtired, unable to concentrate or under the influence of alcohol, drugs or medication must not work on or with the machine.

Before using the machine, check that it is in perfect condition. If the machine is damaged, it must not be used. Then secure the machine against use and repair it or arrange for it to be repaired.

In order not to jeopardise the functionality and safety of the machine, covers or other components of the machine must not be removed.

Before starting or starting up the machine, ensure that persons are not endangered by the starting machine.

Operating elements must not be operated thoughtlessly or wilfully. This could result in personal injury or damage to the machine.

Air inlet and outlet openings must not be covered during use.

Never immerse the machine in water.

The machine must be cleaned regularly so that dirt does not accumulate. All operating elements and handles must be kept clean, dry and free of grease.

When the machine is not in use, it must be parked in such a way that nobody is endangered. Secure the machine against unauthorised use.

2.5 Safety during maintenance

2.5.1 General information

The machine may only be serviced by persons who have completed the appropriate specialised training for this activity.

The maintenance activities and intervals specified in the operating instructions must be observed.

Workshop equipment appropriate to the type of work is required to carry out maintenance activities.

The following safety precautions must be taken before starting maintenance work:

- Position the machine so that the surgical site is easily accessible.
- Machine to the corresponding operating status.

After completion of maintenance activities:

- Assemble the machine completely.
- If operating elements or safety devices have been removed, they must be refitted and their function checked.
- Retighten loosened screw connections. Re-apply the screw locks.

2.5.2 Cleaning

Do not use any corrosive, harmful or environmentally damaging substances to clean the machine.
Dispose of cleaning agents in an environmentally friendly manner.

Under no circumstances should high-pressure cleaners, water jets or compressed air be used to clean the machine.

3 Technical data

Article number	6572
Dehumidification performance (at 30°C / 80% humidity)	60 litres/24h
Air circulation	350 m³/h
Recommended room area	40 m² to 60 m²
Recommended room volume	100 m³ to 150 m³
Performance	850 W
Tension	230 V ±5% / 50 Hz
Refrigerant	Propane (R290)
Refrigerant quantity	210 g
Width	425 mm
Depth	490 mm
Height	930 mm
Weight	31 kg
Condensate container	6 litres
Length of the mains cable	1.8 m
Type of mains cable	H05RN-F 3G0.75
Permissible ambient temperature	5°C to 35°C
Permissible relative humidity	30% to 80%
Sound power level L_{weq}	50 dB(A) to 55 dB(A)

4 Machine description

4.1 Machine components and operating devices

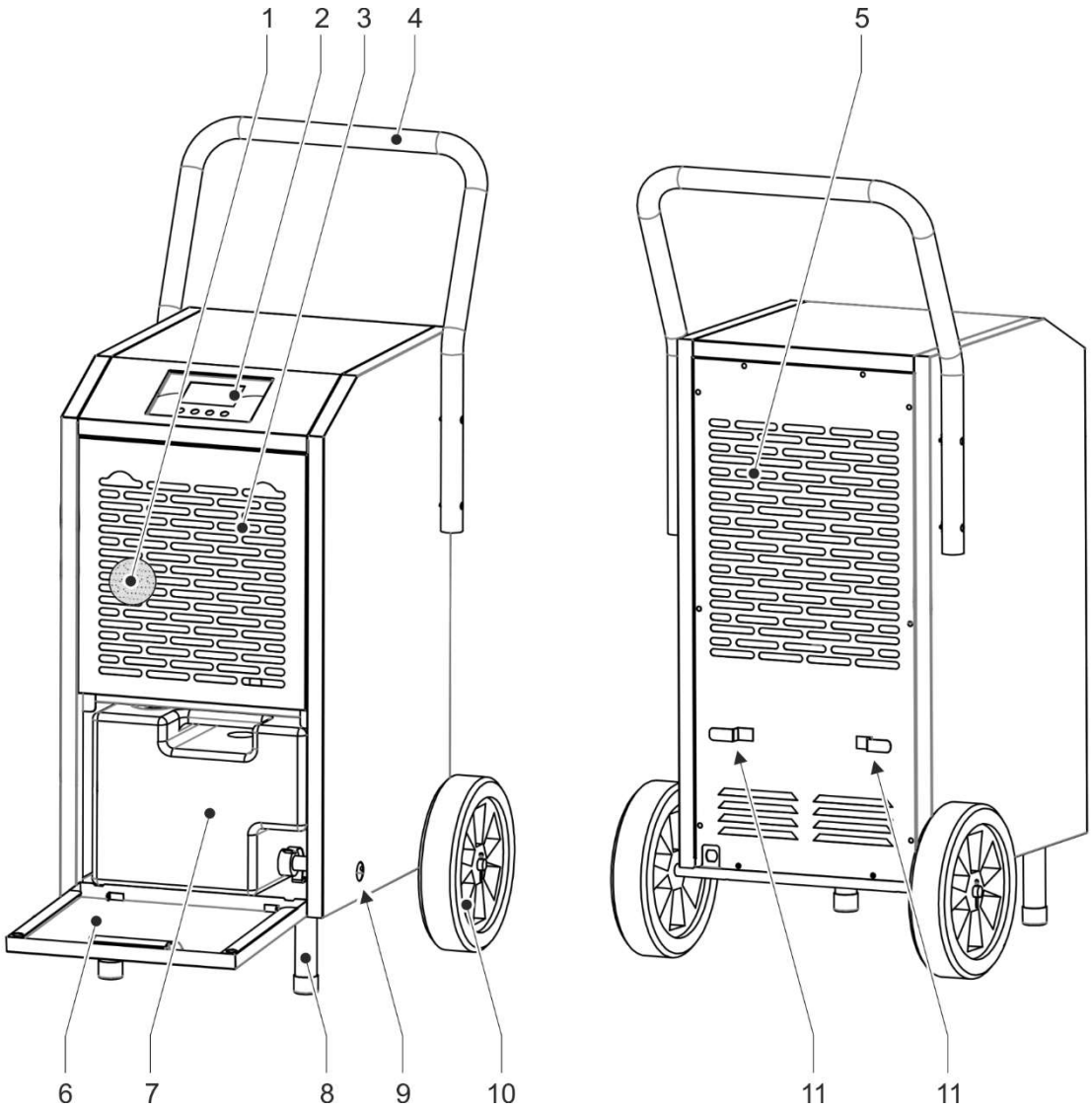

1	Air filter
2	Display
3	Air inlet
4	Transport handle
5	Air outlet
6	Condensate container flap
7	Condensate container
8	Stand
9	Hole for optional condensate hose
10	Wheel
11	Winding frame

4.2 Display

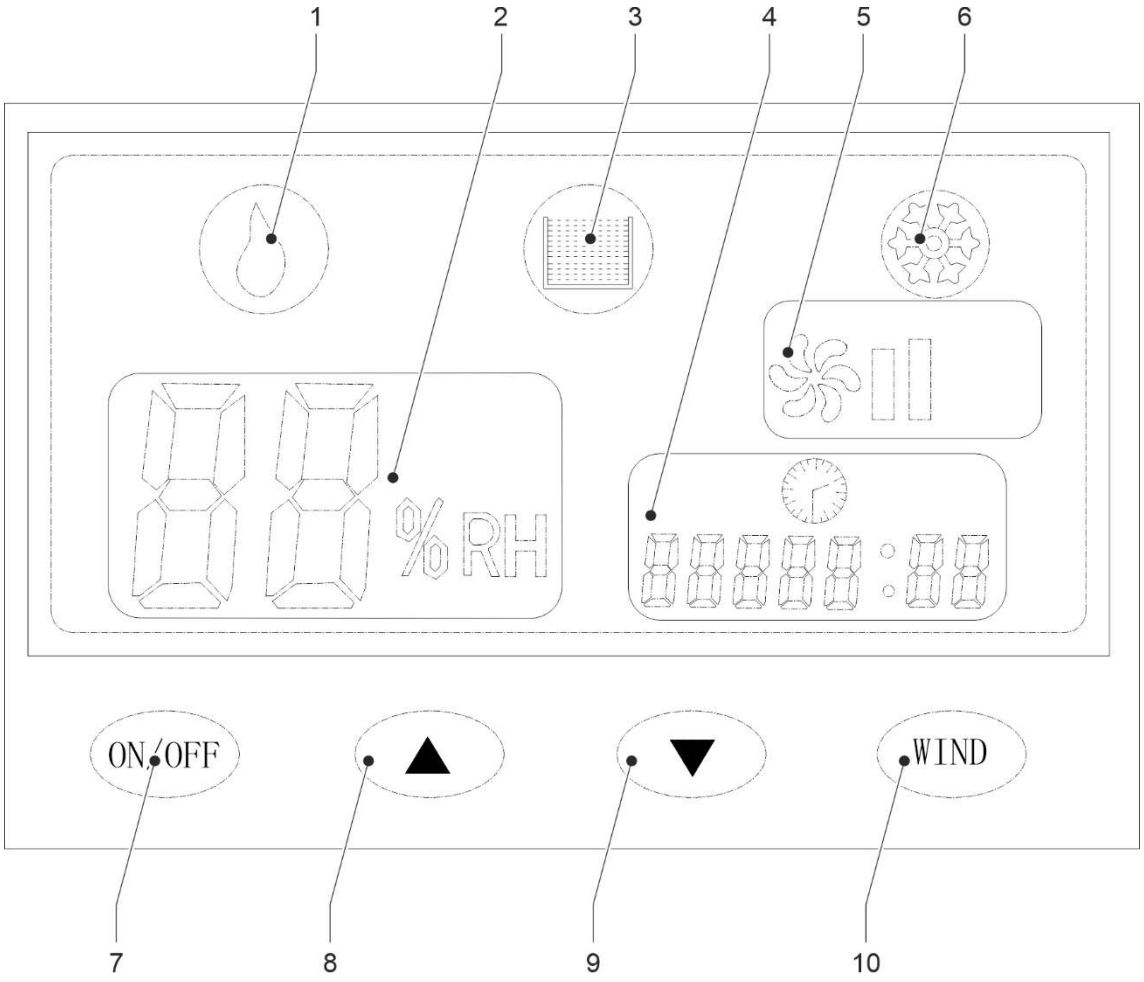

1 "Dehumidification mode" display
2 "Humidity" display
3 "Condensate container full" display
4 Operating hours counter
5 "Airflow speed" display
6 "Automatic de-icing" display
7 On/off button
8 Plus button
9 Minus button
10 "Airflow speed" button

4.2.1 On/off button

The machine is switched on and off using the on/off button (labelled ON/OFF).

4.2.2 Plus and minus button

The desired humidity value can be set using the "Plus" (labelled +) and "Minus" (labelled -) buttons.

Pressing the button once increases or decreases the value by one digit. If the button is held down, the value runs until the button is released.

4.2.3 "Airflow speed" button

This "Air flow speed" button (labelled Wind) can be used to set the speed of the air flow in two stages during the dehumidification process.

If the "Airflow speed" button is pressed for 10 seconds, the following settings can be changed:

- Compressor running time (P1)
- Defrosting time (P2)



Kernlochbohrer GmbH recommends not to change these settings, as they have been optimised at the factory.

4.2.4 Operating hours counter

The operating hours counter records the running time of the machine.

When the machine is switched off or the electrical connection is disconnected, the full hours are saved; the minutes are reset to zero.

4.3 Circuit diagram

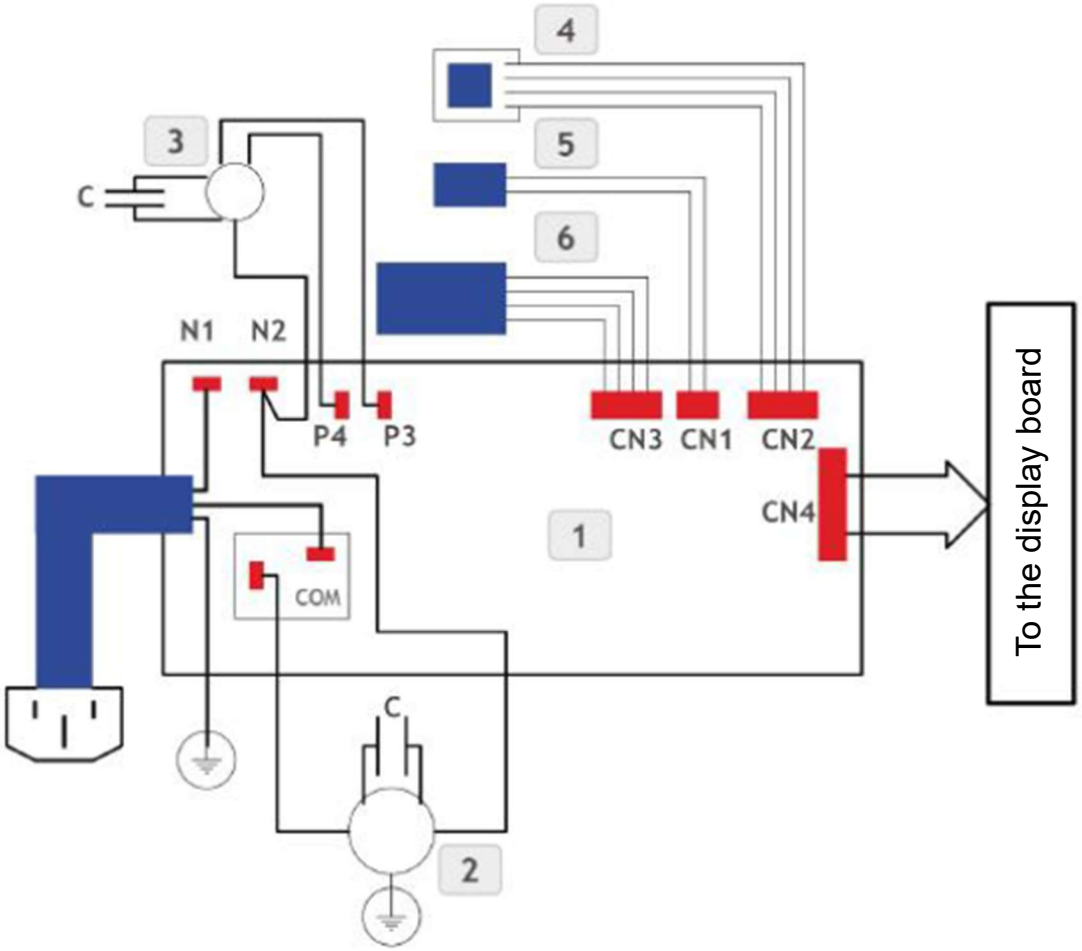

1 Main board
2 Compressor
3 Blower motor
4 Humidity sensor
5 Temperature sensor
6 Light barrier

4.4 Scope of delivery

The scope of delivery of the machine includes the following components:

- Building dryer
- Transport handle with 4 fastening screws
- 2 Feet with fixing material
- 2 Wheels with mounting material
- Operating instructions

5 Utilisation of the machine

5.1 Specific precautions

5.1.1 Building dryer



Danger of electric shock!

The machine does not have the appropriate degree of protection and must therefore not be operated in wet rooms (e.g. bathrooms or laundry rooms).

The machine may only be operated indoors.

The air inlet and air outlet of the machine must be at least 50 cm away from walls and similar components during operation.

During operation, the machine must not be exposed to direct sunlight, strong draughts or splashing water.

The machine must not be operated in a puddle of water or near heat sources (heaters, ovens, etc.).

The machine must not be used if there is a risk of frost.

To avoid damage, do not place any objects on the machine.

If a fault occurs during operation of the machine (e.g. smell of burning), switch off the machine immediately and disconnect the mains plug from the socket. Otherwise a fire, electric shock or other incident could occur. The machine must not be switched on again until the fault has been rectified and the machine is functioning correctly.

The room air to be dehumidified must not be contaminated with solvents or other chemicals. This could irreparably damage the machine.

The machine's power cable must be kept away from heat, oil, sharp edges and moving parts. A damaged power cable poses a serious risk of electric shock.

5.1.2 Machines with flammable refrigerant

The machine may only be installed in rooms in which any escaping refrigerant cannot accumulate. This prevents ignition of the refrigerant by ignition sources such as electric cookers or ovens.

The machine may only be set up in rooms where there are no sources of ignition.

The refrigerant used, propane (R290), is colourless and odourless and therefore cannot be detected without suitable measuring equipment.

The applicable national or local regulations for the use of machines with flammable refrigerant must be complied with.

The machine may only be operated or stored in rooms with an area of at least 10.1 m².

The refrigerant circuit is a hermetically sealed and maintenance-free system and may only be repaired by specialised personnel for refrigeration and air conditioning technology.

Persons who carry out work on the refrigerant circuit must have a certificate of competence that proves their expertise in the safe handling of refrigerants.

Hazards due to the refrigerant propane (R290)

Hazard warnings	H220	Extremely flammable gas
	H280	Contains pressurised gas, can explode when heated
Safety instructions	P210	Keep away from heat, hot surfaces, sparks, open flames and other ignition sources. Do not smoke.
	P377	Fire in case of gas leakage: Do not extinguish until leakage can be stopped without danger.
	P381	Remove all sources of ignition if safe to do so.
	P403	Store in a well-ventilated place.

5.2 Transport of the machine

Before transporting the machine:

- Switch off the machine.
- Remove the mains plug from the socket.
- Wind the mains cable around the winding frame at the rear of the machine.
- Empty the condensate container.

The machine may be tilted by a maximum of 45° from the vertical during transport.

If the machine has been accidentally tilted by more than 45°, set up the machine vertically and wait 12 hours before switching on the machine.

After transporting the appliance, place it vertically again and secure it against falling over.

5.3 Unpacking the machine

Procedure:

☒ Remove the machine and accessories from the packaging.

☒ Remove the packaging completely from the machine.

☒ Unwind the mains cable completely. The mains cable and mains plug must not be damaged.

5.4 Commissioning the machine

Procedure:

☑ Machine unpacked.

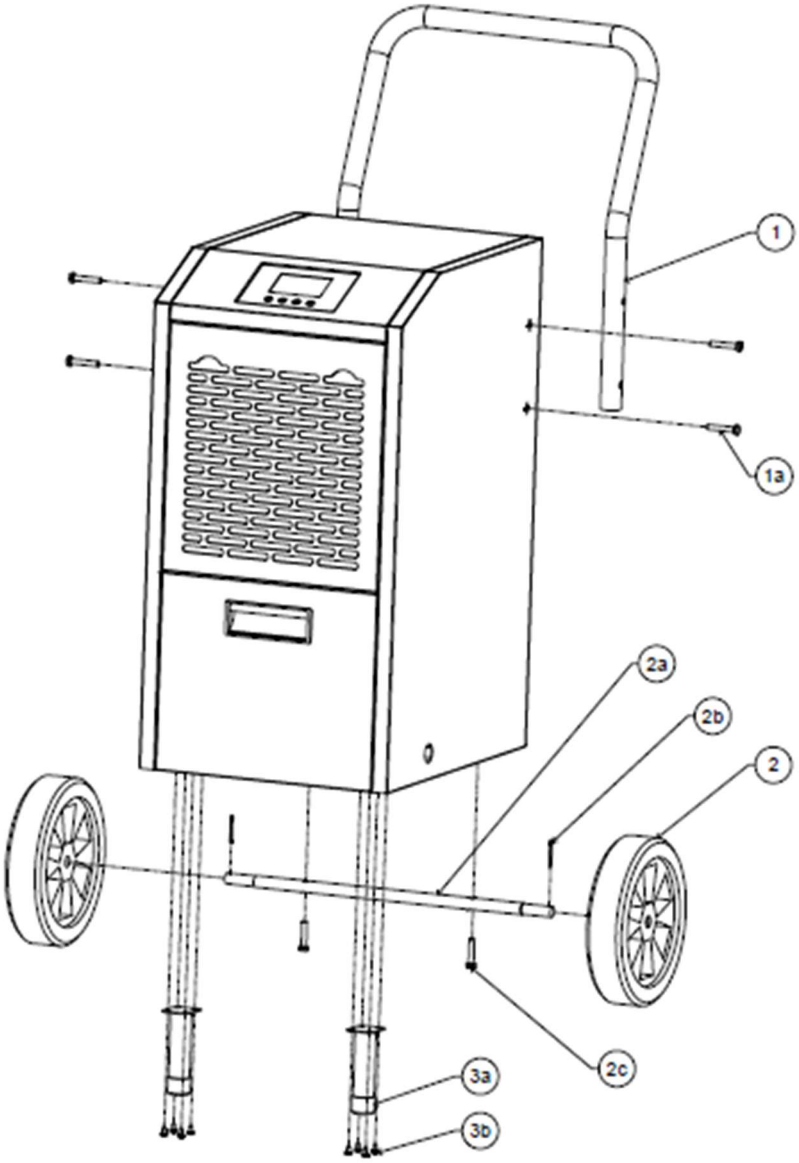

- ☒ Attach the transport handle (1) to both sides of the machine housing with 2 screws (1a) each.
- ☒ Tilt the machine backwards (towards the air outlet) by a maximum of 30°.
  Attach the feet (3a) to the casing with 4 screws (3b) each.
- ☒ Tilt the machine forwards (towards the air inlet) by a maximum of 30°.
  Attach the axle (2a) with the two screws (2c)
  Put the wheels (2) on the axle and secure each one with a split pin (2b).
- ☒ Place the machine on its feet and wheels.
- ☒ Ensure that the air filter is installed at the air inlet.

5.5 Working with the machine

5.5.1 Visual inspection of the machine

Before working with the machine, it must be visually inspected:

- Check the general condition and cleanliness of the machine.
- Check that all covers and machine components are present.
- Check the tightness of all screws.
- Air inlet and outlet openings must not be dirty or covered.
- The mains cable and mains plug must not be damaged.

5.5.2 Electrical connection



Danger of electric shock!

The machine does not have the appropriate degree of protection and must therefore not be operated in wet rooms (e.g. bathrooms or laundry rooms).

Please note the following points:

- Comply with the electrical connection values of the appliance.

  📖 See chapter 3 "Technical data".

- The mains cable and mains plug must not be damaged.
- Damaged mains cable or damaged mains plug may only be replaced by Kernlochbohrer GmbH or a qualified electrician.
- The mains plug and socket must be clean and dust-free.
- The supplied electrical voltage must not deviate by more than 5% from the nominal value. Excessive voltages can lead to irreparable damage to the machine.
- When operating the machine with power generators, voltage peaks must not occur.
- When connecting the machine to the mains, a residual current device (RCD) with a maximum tripping current of 30 mA must be connected upstream.
- The machine is supplied with a type F mains plug (CEE 7/4). It may only be operated at the corresponding safety sockets (CEE 7/3).
- When using extension cables, the cable cross-section must be suitable for the power consumption of the machine.
- When using a cable reel, the cable must always be unrolled completely.
- To remove the mains plug from the socket, grasp the mains plug. Do not pull on the cable.
- If the machine is not to be used for a longer period of time, switch off the machine and remove the mains plug from the socket.

5.5.3 Switch on the machine



The machine may only be operated or stored in rooms with an area of at least 10.1 m²



The machine may be tilted by a maximum of 45° from the vertical during transport and operation.
If the machine has been accidentally tilted by more than 45°, set up the machine vertically and wait 12 hours before switching on the machine.

Procedure:

☑ Commissioning of the machine.

☑ Visual inspection of the machine carried out.

☒ Close the windows and doors of the room to be dehumidified.

☒ Set up the machine on a level surface in a vertical position.



If the machine tips over, coolant could escape and cause damage to the machine or other objects. This could also cause a fire or the risk of electric shock.

🕮 See also chapter 5.1 "Specific precautions".

☒ Make the electrical connection to the machine.

🕮 See chapter 5.5.2 "Electrical connection".

☒ Press the on/off button.

↳ The machine confirms switching on with a signal tone.

↳ The humidity of the ambient air is shown on the machine display:

☒ Use the plus and minus buttons to set the desired humidity (30 - 80%).

Meanwhile, the "Dehumidification mode" display flashes.

☒ Wait 5 seconds after reaching the desired humidity setting.

↳ The desired humidity is saved.

↳ The "Humidity" indicator lights up continuously.

↳ The machine starts dehumidifying the ambient air. The "Humidity" display shows the change over time.

☒ Use the "Airflow speed" button to set the desired airflow speed. Two different levels can be selected.

ⓘ When the condensate container is completely filled with water, the machine reacts as follows:

- The dehumidification process is stopped.
- An acoustic signal sounds.
- The "Condensate container full" indicator lights up on the display.
- The "FU" fault message also appears on the display.

🕮 Emptying the condensate container see chapter 6.3.1.

ⓘ If the condensate is to be drained freely to a suitable drain or collection container, a hose can be attached. A hose connector (outer diameter 13 mm) is provided on the condensate container for this purpose.

- Switch off the machine.
- Open the condensate container flap.
- Remove and empty the condensate container.
- Remove the plug on the hose nozzle of the condensate container.
- Slide a suitable hose onto the hose nozzle and secure it.
- Guide the free end of the hose through the hole in the housing and lead it to a suitable drain or a sufficiently large collection container. Ensure that the hose is laid without kinks.
- Insert the condensate container.
- Close the condensate container flap.

ⓘ When the humidity of the ambient air has reached the desired value, the machine switches off automatically.

ⓘ When the ambient temperature is low, the machine starts the de-icing process automatically:

- The compressor is switched off.
- The fan continues to run.

ⓘ When switching off and on again, the machine has a switch-on delay of 3 minutes.

ⓘ When the machine is switched off, the number of operating hours carried out is saved.

5.5.4 Switch off the machine

Procedure:

☒ Press the on/off button.

↳ The machine is switched off.

☒ Remove the mains plug from the socket.

☒ Wind the mains cable around the winding frame on the back of the machine.

☒ Empty the condensate container.

🕮 See chapter 6.3.1 "Empty the condensate container".

☒ Check the machine for soiling. Clean the machine if necessary.

🕮 See chapter 6.3.2 "Cleaning the machine".

5.5.5 Store the machine



The machine may only be operated or stored in rooms with an area of at least 10.1 m²

🕮 See also chapter 5.1 "Specific precautions".

Procedure:

☑ Machine switched off.

🕮 See chapter 5.5.4 "Switch off the machine".

☒ Clean the machine and allow to dry completely.

🕮 See chapter 6.3.2 "Cleaning the machine".

☒ Clean the air filter.

🕮 See chapter 6.3.3 "Clean the air filter".

☒ Park the machine vertically and secure it against falling over.

☒ Protect the machine from dust ingress with a plastic bag.

☒ Store the machine in a dry, cool place protected from moisture and direct sunlight.

☒ Secure the machine against unauthorised use.

6 Maintenance

6.1 Notes on proper maintenance

Insufficient or improper maintenance can cause malfunctions and impair the operational safety and service life of the machine. Regular inspection and maintenance is therefore essential. We recommend that maintenance work is only carried out by trained personnel.

The contractually agreed warranty does not release the operator of the machine from the obligation to maintain the machine in accordance with the manufacturer's instructions from the time of commissioning. Kernlochbohrer GmbH is not liable for damage caused by a lack of maintenance.

6.2 Maintenance and inspection plan

The interval specifications refer to normal operating conditions. In more difficult conditions (heavy dust accumulation, etc.) and longer daily working times, the specified intervals must be shortened accordingly by the operator.

Only use the maintenance and inspection schedule as a guide! Be sure to follow the cross-references to the other chapters! They describe in detail how to carry out the individual tasks correctly and safely.

Interval	Category	Component	Activity	Chapter
After display		Condensate container	Emptying	6.3.1
1 week	Real time	Machine	Cleaning	6.3.2
1 month	Real time	Air filter	Cleaning	6.3.3

6.3 Inspection and maintenance

6.3.1 Empty the condensate container

Interval:

If the "Condensate container full" indicator lights up and the "FU" fault message appears on the machine display

Procedure:

☑ Switch off the machine and remove the mains plug from the socket.

🕮 See chapter 5.5.4 "Switch off the machine".

☒ Open the condensate container flap.

☒ Remove the condensate container.

☒ Empty the condensate container via a drain.

☒ Rinse out the condensate container with clear water.

Clean the condensate container regularly with a mixture of water and mild detergent (e.g. washing-up liquid).

☒ Insert the condensate container.

☒ Close the condensate container flap.

6.3.2 Cleaning the machine



Do not use sharp sponges or metal objects to clean the machine. These could damage the surface of the machine.

Do not use high-pressure cleaners, water jets or compressed air to clean the machine. The sharp water or air jet could damage the machine.

No corrosive, harmful or environmentally damaging substances may be used to clean the machine.

Interval:

1 week real time

Auxiliary means:

- The cleaning agent should be placed in a container with a mixture of water and mild detergent (e.g. washing-up liquid).
- Cloth and brush

Procedure:

☑ Switch off the machine and remove the mains plug from the socket.

🕮 See chapter 5.5.4 "Switch off the machine".

☒ Clean the machine to remove dust and dirt.

- Use a damp cloth dipped in water mixed with a mild detergent.
- Water must not be allowed to enter the inside of the housing via the ventilation openings.

☒ Clean the air inlet and outlet openings with a brush and damp cloth.

☒ Allow the machine to dry completely.

6.3.3 Clean the air filter

ⓘ If the machine is used in a very dusty environment, the maintenance interval may have to be shortened by the operator.

A dirty air filter reduces performance and shortens the service life of the machine.

The machine must not be operated without an air filter.

Interval:

1 month real time

Auxiliary means:

- Flat container for inserting the air filter; filled with warm water.
- Soft brush

Procedure:

☑ Switch off the machine and remove the mains plug from the socket.

🕮 See chapter 5.5.4 "Switch off the machine".

☑ Machine cleaned.

🕮 See chapter 6.3.2 "Cleaning the machine".

☒ Remove the air inlet grille.

☒ Remove the air filter.

☒ Place the air filter in a container with warm water and clean carefully with a soft brush.

☒ Dry the air filter thoroughly.

☒ Check the air filter for damage. The edges and corners of the air filter must not be rounded or deformed. Replace damaged air filter.

☒ Clean the air inlet grille and the inside of the air filter holder.
To do this, use a cloth dipped in water mixed with a mild detergent and then dry thoroughly.

☒ Insert air filter.

☒ Attach the air inlet grille.

7 Troubleshooting

If a fault occurs during operation of the machine, please first try to rectify the fault yourself using the following information.

If you are unable to rectify the fault yourself, please contact Kernlochbohrer GmbH.

Malfunction	Possible cause	Troubleshooting
Machine does not run	No power supply	Establish power supply
	Mains plug not fully inserted	Insert the mains plug fully
Insufficient dehumidification	Air filter dirty	Clean the air filter
	Air inlet and/or air outlet blocked	Remove obstacles. Clean the air inlet and air outlet
	Room not closed	Close windows and doors
	Low room temperature	Increase room temperature.
Unusual noises	Machine not vertical	Set up the machine vertically
	Condensate drain blocked	Cleaning the condensate drain
Error "E1"	Coil sensor error	Please contact Kernlochbohrer GmbH
Error "E2"	Moisture sensor error	Please contact Kernlochbohrer GmbH
Error "E3"	Temperature sensor error	Please contact Kernlochbohrer GmbH
Error "E4"	Hot-cold system error	Please contact Kernlochbohrer GmbH
Error "E5"	Room temperature too high	Lower the room temperature. The machine then starts automatically
Error "FU"	Condensate container full	Empty the condensate container

8 EU Declaration of Conformity

The manufacturer/distributor

Kernlochbohrer GmbH
Geigersbühlweg 52
72663 Großbettlingen
Germany

hereby declares that the following product

Product description:	**Building dryer**
Type:	**BT60**

complies with all relevant provisions of the applicable legal regulations (hereinafter) - including their amendments valid at the time of the declaration. This declaration of conformity is issued under the sole responsibility of the manufacturer. This declaration relates only to the machine in the state in which it was placed on the market; parts and/or modifications subsequently fitted by the end user are not taken into account.

The following legal provisions were applied:

Low Voltage Directive 2014/35/EU

Electromagnetic Compatibility Directive 2014/30/EU

Restriction of the use of certain hazardous substances in electrical and electronic equipment (RoHS) 2002/95/EC and amendment 2011/65/EU

Directive 2012/19/EU on waste electrical and electronic equipment (WEEEII)

The following harmonised standards were applied:

EN 60335-2-40: 2003 + A11:2004 + A12:2005 + A1:2006 + A2:2009 + A13:2012

EN 60335-1:2012 + A11:2014 + A13:2017 + A1:2019 + A14:2019 + A2:2019

EN 62233:2008

EN 55014-1:2017 + A11:2020EN	55014-2:2015
EN IEC61000-3-2:2019EN	61000-3-3:2013 + A1:2019

Name and address of the person authorised to compile the technical documentation:

Kernlochbohrer GmbH
Geigersbühlweg 52
72663 Großbettlingen
Germany

Großbettlingen 2024-11-29

Kernlochbohrer GmbH

Guido Pillat
Managing Director / Chief Executive Officer