KERNLOCHBOHRER®
PROFESSIONAL POWER TOOLS

Operating instructions

Diamond core drilling system DKB252/Xtrem & KBS252/Light

BA-01-000003-03-EN

Scope of application

These Operating instructions only apply to the machine labelled on the cover sheet.

Check the machine model using the machine's rating plate.

Original instructions / translation of the original instructions

In accordance with the EU Machinery Directive, the German copy of these Operating instructions is the original instructions.

Copies in other languages are translations of the original instructions.

Kernlochbohrer GmbH

Geigersbühlweg 52

72663 Großbettlingen

Germany

Phone: +49 (0)70 22 / 50 34 900

E-mail: info@kernlochbohrer.com

Internet: http://www.kernlochbohrer.com

Kernlochbohrer GmbH

This documentation is protected by copyright.

All rights to this documentation, in particular the right of reproduction, distribution and translation, are reserved by Kernlochbohrer GmbH, even in the case of applications for industrial property rights. No part of this documentation may be reproduced in any form by any means, electronic or mechanical, or processed, duplicated or distributed using electronic systems without the express written permission of Kernlochbohrer GmbH.

Errors and technical changes excepted.

Kernlochbohrer GmbH is not liable for any errors in this documentation. Liability for direct or indirect damages arising in connection with the delivery or use of this documentation is excluded to the extent permitted by law. Furthermore, Kernlochbohrer GmbH cannot be held liable for damages resulting from the infringement of patent and other rights of third parties.

The function of the machine is limited to the functions described in the associated technical documentation.

Table of contents

1 Information and support 7
1.1 Thanks to the buyer 7
1.2 Using the Operating instructions 7
1.3 Changes 7
1.4 Explanation of symbols 8
1.5 Guarantee 8
1.6 Environmental protection 9
1.6.1 Disposal of the product 9
1.6.2 Disposal of the packaging 9
1.7 Service 10
2 Security 11
2.1 General information 11
2.2 Intended use 12
2.3 Safety regulations for the operator 13
2.3.1 Organisational safety measures 13
2.3.2 Changes to the drilling system 13
2.3.3 Spare parts 14
2.3.4 Personnel 14
2.4 Safety regulations for staff 15
2.4.1 Safe behaviour 15
2.4.2 Safe operation 16
2.4.3 Protective equipment 17
2.5 Safety during maintenance 18
2.5.1 General information 18
2.5.2 Cleaning 18
3 Technical data 19
4 Machine description 20
4.1 Components of the drilling system 20
4.2 Operating elements of the core drill 22

4.3 Protective devices of the core drill 23
4.3.1 Mechanical overload protection 23
4.3.2 Electronic overload protection 23
4.3.3 Overvoltage protection 24
4.3.4 Overheating protection 24
4.4 Protective devices of the core drill rig 25
4.4.1 Securing feed slide on guide stand 25
4.5 Scope of delivery 26
5 Utilisation of the drilling system 27
5.1 Specific precautionary measures 27
5.2 Initial commissioning 28
5.3 Transport of the drilling system 29
5.4 Working with the drilling system 29
5.4.1 Visual inspection of the drilling system 29
5.4.2 Secure the feed carriage on the guide stand 30
5.4.3 Attach core drill rig 31
5.4.4 Align core drill rig 32
5.4.5 Attaching the core bit to the core drill 32
5.4.6 Attaching the core drill to the core drill rig 34
5.4.7 Establish the water supply for the core drill 35
5.4.8 Establish the electrical connection of the core drill 36
5.4.9 Use drilling system 37
5.4.10 Switch off the drilling system 40
5.4.11 Store drilling system 41
6 Maintenance 42
6.1 Notes on proper maintenance 42
6.2 Maintenance and inspection plan 42
6.3 Inspection and maintenance 43
6.3.1 Cleaning and checking the drilling system 43
6.3.2 Check the condition of the gear oil of the core drill 46
7 Troubleshooting 47
7.1 Core drill 47

7.2 Core drill rig 49
8 Spare parts 50
8.1 Core drill 50
8.2 Core drill rig 52
9 EU Declaration of Conformity 54

1 Information and support

1.1 Thanks to the buyer

Thank you for purchasing a machine from Kernlochbohrer GmbH.

Please read the Operating instructions carefully and observe the safety instructions. By following the Operating instructions, you will be able to fully utilise the outstanding performance of our product.

If you have any questions regarding the operation of the machine, please contact Kernlochbohrer GmbH directly. We are available to answer your questions at any time.

1.2 Using the Operating instructions

The machine is intended for professional use and may only be operated by trained personnel. Strictly adhere to the instructions in the Operating instructions.

Our company declines all responsibility if the Operating instructions are not observed, which may result in injury or damage to the machine.

The Operating instructions are indispensable for using the machine. The Operating instructions must therefore always be kept close to the machine and be accessible to the intended personnel at all times.

In addition to the Operating instructions, the generally applicable and local regulations for accident prevention and environmental protection must be provided; compliance with these regulations must be checked regularly.

1.3 Changes

Kernlochbohrer GmbH reserves the right to change the design and appearance of the products and their Operating instructions. Future changes to the Operating instructions will be made without prior notice.

1.4 Explanation of symbols

⚠ The symbol draws your attention to dangers that you must be aware of when carrying out the following work in order to avoid injury to yourself, other persons or damage to property.

📖 Cross-reference to another point in the Operating instructions.

☑ Prerequisite for an action.

☒ Action to be performed.

↳ Behaviour of the machine that is to be expected as a result of the preceding action.

ⓘ Background information or reference to special features.

1.5 Guarantee

In accordance with Kernlochbohrer GmbH's general terms and conditions of delivery, a warranty period of 12 months applies to material defects in business transactions with companies (proof by invoice or delivery note).

Damage caused by natural wear and tear, overloading or improper handling is excluded.

Damage caused by material or manufacturer defects will be rectified free of charge by repair or replacement. Complaints can only be recognised if the device is sent to Kernlochbohrer GmbH undismantled.

Wear parts are excluded from the warranty.

1.6 Environmental protection

1.6.1 Disposal of the product

Follow national regulations on environmentally friendly disposal and recycling of used machines and accessories.

For EU countries only:

Do not dispose of the machine with household waste! In accordance with European Directive 2012/19/EU on waste electrical and electronic equipment and its transposition into national law, used power tools must be collected separately and recycled in an environmentally friendly manner.

1.6.2 Disposal of the packaging

The packaging is made from recyclable materials. They must be disposed of in accordance with their labelling and municipal guidelines.

1.7 Service

Precise information and specific questions allow faults to be rectified quickly, make it easier to order spare parts and prevent incorrect deliveries.

Before contacting the service, please collect the following data first.

The model designation must be stated in all enquiries and orders. This information can be found on the rating plate of the machine.

In the event of malfunctions, further information is required: type and extent of the malfunction, accompanying circumstances, suspected cause.

When ordering spare parts, the following is required: Quantity and item number in the exploded drawing in these Operating instructions.

Contact details:

Kernlochbohrer GmbH
Geigersbühlweg 52
72663 Großbettlingen
Germany
Phone: +49 (0)70 22 / 50 34 900
E-mail: info@kernlochbohrer.com
Internet: http://www.kernlochbohrer.com

2 Security

ⓘ In these Operating instructions, the term drilling system is used for the combination of core drilling machine and core drill rig.

2.1 General information

The drilling system was built according to the state of the art and in compliance with the applicable laws, standards and safety regulations. Nevertheless, the use of the drilling system may pose a risk to the user or third parties and cause damage to the drilling system and other property.

The drilling system may only be used if it is in perfect condition and in accordance with its intended use, and in a safe and hazard-conscious manner.

If the drilling system is damaged or malfunctions, switch off the drilling system immediately, secure it against being switched on again and repair it or arrange for it to be repaired.

2.2 Intended use

The drilling system is designed exclusively for drilling concrete, reinforced concrete, stone, masonry and similar materials with corresponding drill bits in wet cutting.

The core drill of this drilling system may only be used together with the supplied core drill stand or another core drill stand to which the core drill can be securely attached. The core drill is not suitable for hand-held drilling.

It is important to always use a drill bit that is suitable for the drilling technique and the material to be drilled.

The drilling system may only be used within the limits of its technical data. This information, for example performance data and ambient conditions, can be found in the "Technical data" chapter.

Any other use or use beyond this is considered improper use - risk of accident! Kernlochbohrer GmbH is not liable for any resulting damage. The risk is borne solely by the operator. In order to be able to determine in the event of damage whether the damage was caused by improper use, overload conditions are permanently recorded by the machine.

Intended use also includes observing the operating instructions and complying with the prescribed maintenance intervals.

2.3 Safety regulations for the operator

2.3.1 Organisational safety measures

The Operating instructions must always be available for the operating and maintenance personnel. It must therefore always be kept at the place of use of the drilling system.

The regulations on accident prevention and environmental protection applicable at the location where the drilling system is used must also be available. The operator of the drilling system must regularly check compliance with these regulations.

The use of sound-emitting machines may be limited in time by national or local regulations.

The drilling system must not be operated in potentially explosive atmospheres or in the vicinity of flammable liquids, gases or combustible dust.

All safety and danger notices on the drilling system must be legible and must not be removed.

The protective equipment required for operating the drilling system must be provided by the operator. The operator must ensure that the protective equipment is used properly by the personnel.

Operating and auxiliary materials, such as lubricants or cleaning agents, must be selected in such a way that the limit values for hazardous substances applicable at the place of use are complied with. The regulations for environmental protection and disposal applicable at the place of use must be complied with.

2.3.2 Changes to the drilling system

The operator may not make any changes to the drilling system without written authorisation from Kernlochbohrer GmbH. If the operator carries out modifications without authorisation, the warranty becomes void. Kernlochbohrer GmbH is not liable for damage caused by unauthorised modifications.

2.3.3 Spare parts

Spare parts must comply with the properties defined by Kernlochbohrer GmbH. This is always guaranteed for spare parts supplied by Kernlochbohrer GmbH. Kernlochbohrer GmbH is not liable for damage caused by the use of unsuitable spare parts.

2.3.4 Personnel

All persons tasked with commissioning, operating and maintaining the drilling system must have read and understood the Operating instructions beforehand.

The drilling system may only be operated by persons who have been adequately instructed beforehand.

The maintenance of the drilling system may only be carried out by persons who have completed the appropriate specialised training for this activity.

Minors are not permitted to work with the drilling system. Young people over the age of 16 who are trained under supervision are exempt from this regulation.

2.4 Safety regulations for staff

2.4.1 Safe behaviour

All persons responsible for commissioning, operating and maintaining the drilling system must have read and understood the Operating instructions beforehand.

The drilling system may only be operated by persons who have been adequately instructed beforehand.

The maintenance of the drilling system may only be carried out by persons who have completed the appropriate specialised training for this activity.

Minors are not permitted to work with the drilling system. Young people over the age of 16 who are trained under supervision are exempt from this regulation.

Any work on and with the drilling system that impairs safety must be avoided.

All safety and danger notices on the drilling system must be legible and must not be removed.

2.4.2 Safe operation

Operating the drilling system requires the full concentration and ability of the personnel. Persons who are overtired, unable to concentrate or under the influence of alcohol, drugs or medication must not work on or with the drilling system.

Persons who are not directly required for the operation of the drilling system must maintain a sufficient safety distance from the drilling system.

Before using the drilling system, check that it is in perfect condition. If the drilling system is damaged, it must not be used. Then secure the drilling system against use and repair it or arrange for it to be repaired.

In order not to jeopardise the functionality and safety of the drilling system, covers or other components of the drilling system must not be removed.

Before starting or starting up the drilling system, ensure that persons are not endangered by the drilling system starting up.

Operating elements must not be operated thoughtlessly or wilfully. This could result in personal injury or damage to the machine.

When using the drilling system, personnel must ensure that they stand securely and adopt an ergonomic posture.

The drilling system must not be left unattended during use.

Stopping the drilling system during operation with a heavy load must be avoided. This could lead to damage due to overheating.

Air inlet and outlet openings must not be covered during use.

Never immerse the drilling system in water.

The drilling system must be cleaned regularly so that dirt does not accumulate. All operating elements and handles must be kept clean, dry and free of grease.

If the drilling system is not in use, it must be parked in such a way that nobody is endangered. Secure the drilling system against unauthorised use.

2.4.3 Protective equipment

Persons using the drilling system, are obliged to wear safety goggles in accordance with standard EN 166 or a face shield.

If the noise emissions generated when using the drilling system exceed the limits applicable to this workplace, suitable hearing protection must be worn.

When using the drilling system, dust and vapours may be generated that may contain harmful substances. If the formation of dust and vapours cannot be safely prevented, the operating personnel and bystanders must always wear a respirator approved for the material being processed.

Wearing additional protective equipment reduces the risk of injury:

- Safety shoes with non-slip sole and protective toe cap.
- Cut-resistant and non-slip gloves.
- Safety helmet

Loose-fitting clothing, long hair or body jewellery can get caught on moving parts of the drilling system!

Persons carrying out maintenance work on the drilling system are obliged to wear the appropriate protective equipment required for this work.

2.5 Safety during maintenance

2.5.1 General information

The maintenance of the drilling system may only be carried out by persons who have completed the appropriate specialised training for this activity.

The maintenance activities and intervals specified in the Operating instructions must be observed.

Workshop equipment appropriate to the type of work is required to carry out maintenance activities.

The following safety precautions must be taken before starting maintenance work:

- Position the drilling system so that the surgical site is easily accessible.
- Set the drilling system to the appropriate operating state.

After completion of maintenance activities:

- Assemble the drilling system completely.
- If operating elements or safety devices have been removed, they must be refitted and their function checked.
- Retighten loosened screw connections. Re-apply the screw locks.

Persons carrying out maintenance work on the drilling system are obliged to wear the appropriate protective equipment required for this work.

2.5.2 Cleaning

Do not use any corrosive, harmful or environmentally damaging substances to clean the drilling system. Dispose of cleaning agents in an environmentally friendly manner.

Under no circumstances should high-pressure cleaners, water jets or compressed air be used to clean the drilling system.

3 Technical data

Article number			6194
Power consumption			3000 W
Electrical tension			230 V ±5% / 50 Hz
Power consumption			16 A
Spindle thread			1 ¼" UNC & G ½"
Maximum drilling diameter			
	Aisle 1	610 1/min	252 mm
	Aisle 2	1320 1/min	132 mm
	Aisle 3	2750 1/min	76 mm
Weight			15.3 kg
Permissible ambient temperature			5°C to 40°C
Permissible relative humidity			30% to 80%
Protection class			IP 20
Connector plug			Type F (CEE 7/4)
Mains cable			H07RN-F 3G 2.0 | 3 m
Sound power level L_{weq} at idle			82 dB(A)
Water supply connection			Gardena plug-in system
Maximum feed length			500 mm
Dimensions of the guide stand			40 x 40 x 750 mm

4 Machine description

4.1 Components of the drilling system

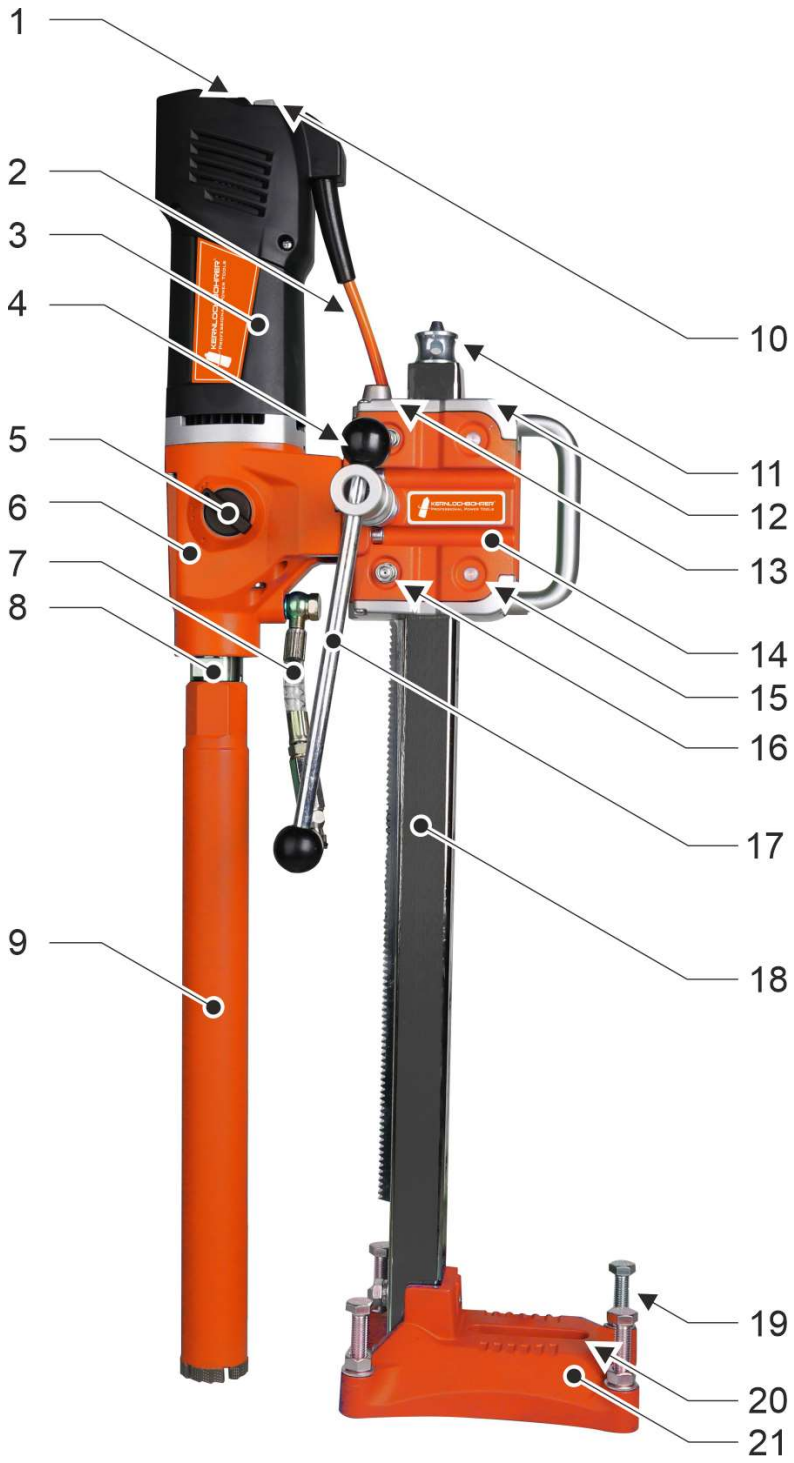

1 LED warning indicators
2 Mains cable with personal protection circuit breaker (PRCD)
3 Motor housing (glass fibre reinforced polyamide)
4 Spirit level for horizontal mounting
5 Gear selector switch
6 Gearbox housing (aluminium)
7 Connection for water supply (with ball valve)
8 Drill spindle
9 Drill bit (not included in the scope of delivery)
10 On/off switch
11 Clamping screw of the core drill rig
12 Spirit level for vertical mounting
13 Locking lever of the feed carriage
14 Feed slide
15 Fixed rollers of the feed carriage (4 pieces)
16 Adjustable rollers of the feed carriage (4 pieces)
17 Feed lever (attachable on both sides)
18 Guide stand with toothed rack
19 Levelling screws (4 pieces)
20 Slotted hole for fastening the core drill rig
21 Foot

4.2 Operating elements of the core drill

LED warning indicators and on/off switch

1 LED "Overload"

2 LED "🛠 "

3 On/off switch

Personal protection circuit breaker (PRCD)

1 “TEST“ button

2 “RESET" button

4.3 Protective devices of the core drill

4.3.1 Mechanical overload protection

This core drill is equipped with a mechanical slip clutch to protect the operator and the machine from excessive torque forces. If the drill suddenly jams in the hole, the safety clutch triggers and the drill spindle stops

The slipping clutch must not be loaded for longer than 3 to 4 seconds. If the slipping clutch is activated during the drilling process, the feed pressure must be reduced immediately. Otherwise, the safety clutch may be destroyed due to the high level of wear. Once the drill bit has returned to normal speed, the drilling process can be continued.

4.3.2 Electronic overload protection

There are 2 LED indicators above the on/off switch of the core drill.

If the core drill is in an overload state, the red LED labelled "Overload" lights up. This signals to the operator that the maximum power supply has been reached. The feed pressure must then be reduced immediately until the red LED goes out.

If the core drill is operated in overload mode for an extended period of time, the machine switches off for its own protection and the red LED lights up permanently. Shutting down the machine due to an overload constitutes improper use and can result in the warranty for the machine being voided.

After shutting down the machine due to an overload, disconnect the machine from the mains and carry out the following checks:

- Drill bit not jammed in the hole?
- Gear selector engaged in the desired position?
- Can the drill bit be rotated normally?

The core drill can then be restarted.

4.3.3 Overvoltage protection

The core drill can absorb short-term voltage peaks of up to a maximum of 260 volts. Higher voltages can cause irreparable damage, which is why the machine switches off for its own protection.

Please note that if the core drill is operated with a generator, do not exceed the maximum specified value.

If the overvoltage protection trips during operation of the core drill, the power supply must be checked and replaced if necessary.

4.3.4 Overheating protection

If the temperature of the core drill motor becomes too high, the built-in thermal circuit breaker is triggered and the core drill switches off to protect itself. At the same time, the yellow LED light labelled "🛠 " lights up above the on/off switch.

If the overheating protection triggers during operation of the core drill, the core drill must not be restarted immediately. The core drill must first cool down for approximately 2 to 3 minutes.

4.4 Protective devices of the core drill rig

4.4.1 Securing feed slide on guide stand

Danger due to unintentional movement of the feed carriage!

The feed carriage must always be secured against unintentional movement (locking lever in "Tight" position).

If the feed carriage lock is cancelled (locking lever in the "Loose" position), the feed carriage can move downwards in an uncontrolled manner due to gravity and cause personal injury or damage to property.

Before releasing the feed carriage: Hold the feed carriage and core drill firmly and secure against falling!

The locking lever can be used to prevent the feed carriage from moving on the guide stand. This is achieved by a locking knob that engages with the splines of the toothed shaft and thus prevents movement.

If the locking lever is in the "Loose" position, the feed carriage can be moved using the feed lever.

If the locking lever is in the "Tight" position, the feed carriage is braked. This prevents the feed carriage and mounted core drill from falling due to gravity, even when the guide stand is in the vertical position.

If the locking lever is in the "Tight" position, the feed carriage must not be moved using the feed lever!

This would damage the locking mechanism and the gear rack on the guide stand.

4.5 Scope of delivery

The scope of delivery of the drilling system includes the following components:

- Diamond core drill DKB252/Xtrem
- Open-end spanner SW 32 and SW 41
- Core drill rig KBS252/Light

ⓘ The drill bits required to use the drilling system must be procured separately.

Kernlochbohrer GmbH offers a comprehensive range of tools and accessories for the drilling system:
- Drill bits
- Adapter for core bits
- Quick-change systems for core bits
- Water collection rings

The webshop http://www.kernlochbohrer.com is available for information and ordering.

5 Utilisation of the drilling system

5.1 Specific precautionary measures

ⓘ In these Operating instructions, the term drilling system is used for the combination of core drilling machine and core drill rig

Risk of injury!

When operating the drilling system, persons must always keep a sufficient distance.

Rotating parts of the core drill and falling or splashing particles can cause injuries.

Danger of electric shock!

The core drill does not have the appropriate degree of protection and must therefore not be operated in the rain or in wet rooms (e.g. bathrooms or laundry rooms).

Only use core bits whose cutting segments are sharp and undamaged. Sharp drill bits do not tilt as quickly when drilling and are easier to guide.

When using the drilling system for drilling vertically upwards, a functional water collection ring must be used. Water must not be allowed to reach the core drill.

Before starting the drilling process, the intended exit point of the drill bit must be inspected. The exit point must be secured and shut off. It must be ensured that no personal injury or material damage is caused by the escaping drill bit.

If a fault occurs during operation of the core drilling machine (e.g. smell of burning), switch off the core drilling machine immediately and disconnect the mains cable from the plug. Otherwise a fire, electric shock or other incident could occur. The core drill may only be switched on again once the fault has been rectified and the function of the drilling system has been ensured.

Before mounting the core drill on the core drill rig, make sure that the core drill rig is properly secured.

The core drill rig must be secured to a level and firm surface. Drilling work with a loose or wobbling core drill rig can lead to dangerous situations.

5.2 Initial commissioning

ⓘ Before using the core drill rig for the first time, the guide stand must be rotated by 180°

Procedure:

⚠ Risk of unintentional movement of the feed carriage due to gravity!

The feed carriage must always be secured against unintentional movement (locking lever in "Tight" position).

📖 See chapter 5.4.2 ”Secure the feed carriage on the guide stand”.

☒ Remove the hexagon head screws (positions 5 and 10 of the spare parts drawing) with spring washers (position 47) and washers (position 8) from the fastening of the guide stand on the foot.

☒ Separate guide stand and foot.

☒ Rotate the guide stand 180° around the longitudinal axis and reattach to the foot using hexagon head screws, spring washers and washers.

↳ The core drill rig can now be used.

5.3 Transport of the drilling system

Before transporting the drilling system:

- Switch off the core drill.
- Remove the power cable from the socket.
- Disconnect the water supply.
- Disconnect the core drill from the core drill rig.
- The core drill rig's feed slide is secured with the locking lever.

5.4 Working with the drilling system

5.4.1 Visual inspection of the drilling system

Before working with the drilling system, it must be visually inspected:

- Check general condition and cleanliness.
- Check that all covers and components are present.
- Check the tightness of all screws.
- The air inlet and outlet openings of the core drill must not be dirty or covered.
- The mains cable and mains plug of the core drill must not be damaged.

5.4.2 Secure the feed carriage on the guide stand

Danger due to unintentional movement of the feed carriage!

The feed carriage must always be secured against unintentional movement (locking lever in "Tight" position).

If the feed carriage lock is cancelled (locking lever in the "Loose" position), the feed carriage can move downwards in an uncontrolled manner due to gravity and cause personal injury or damage to property.

Before releasing the feed carriage: Hold the feed carriage and core drill firmly and secure against falling!

The locking lever can be used to prevent the feed carriage from moving on the guide stand. This is achieved by a locking knob that engages with the toothing of the splined shaft and thus prevents adjustment.

If the locking lever is in the "Loose" position, the feed carriage can be moved using the feed lever.

If the locking lever is in the "Tight" position, the feed carriage is braked. This prevents the feed carriage and mounted core drill from falling due to gravity, even when the guide stand is in the vertical position.

If the locking lever is in the "Tight" position, the feed carriage must not be moved using the feed lever!

This would damage the locking mechanism and the gear rack on the guide stand.

5.4.3 Attach core drill rig

Risk of unintentional movement of the feed carriage due to gravity!

The feed carriage must always be secured against unintentional movement (locking lever in "Tight" position).

The core drill rig must be fixed in the desired position using a metal dowel and a threaded rod or a suitable fixing set. To do this, a mounting hole of a suitable size must be drilled using a hammer drill.

When fastening the core drill rig to a brick wall, a special masonry anchor must be used. The use of a concrete hammer-in anchor on a brick wall could lead to brick breakage and loosening of the anchor!

To fasten the core drill rig, place the base with the slotted hole over the threaded rod or the screw of the fastening set and secure the core drill rig with the nut of the fastening set.

ⓘ Alternatively, the core drill rig can also be attached to the top of the guide stand with the clamping screw using struts, without using dowels.

Ensure that the core drill rig is securely fastened!

Fastening the core drill rig to the ceiling harbours particular risks due to gravity!

ⓘ Kernlochbohrer GmbH recommends the use of the TBS3000PRO telescopic drill rig for ceiling drilling.

5.4.4 Align core drill rig

To bring the core drill rig into the correct drilling position, align the core drill rig by turning the four levelling screws.

The levelling of the core drill rig can be checked using the two spirit levels.

Then tighten all the lock nuts on the levelling screws.

5.4.5 Attaching the core bit to the core drill

A drill bit is a cylindrical tool that is fitted with soldered or laser-welded cutting segments.

To mount the drill bit on the machine, the drill spindle is equipped with a 1 ¼" UNC external thread and a G ½" internal thread.

ⓘ Appropriate adapters are available for drill bits with different threads.

To prevent corrosion and to facilitate disassembly of the core bit, a water-resistant grease can be applied to both threads before assembly.

ⓘ A quick-change system can be used to change drill bits quickly and easily.

Alternatively, a copper ring can be used to easily detach the drill bit from the drill spindle.

⚠ Risk of injury from sharp-edged cutting segments of the drill bit!

Wear cut-resistant gloves!

<u>Auxiliary means:</u>

Water-resistant lubricating grease

Open-end spanner with width across flats SW 32 and SW 41

Prerequisites:

☑ Core drill not connected to the power supply.

☑ Visual inspection of the drilling system carried out.
🕮 See chapter 5.4.1 "Visual inspection of the drilling system".

Procedure:

☒ If necessary, apply a thin coat of water-resistant grease to the internal thread of the core drill bit and the external thread of the core drill spindle.

☒ Screw the core bit onto the drill spindle of the core drill and tighten hand-tight.

☒ Tighten the core bit with an open-end spanner SW41 while holding the drill spindle of the core drill with an open-end spanner SW32.

5.4.6 Attaching the core drill to the core drill rig

Risk of injury!

The core drill may only be used on a core drill rig! The core drill is not suitable for hand-held drilling.

Prerequisites:

☑ Core drill is not connected to the power supply.

☑ Visual inspection of the drilling system carried out.

☑ Core drill rig attached to the drilling position.
🕮 See chapter 5.4.3 "Attach core drill rig".

☑ Core drill rig aligned.
🕮 See chapter 5.4.4 "Align core drill rig".

☑ Drill bit mounted on the core drill.
🕮 See chapter 5.4.5 "Attaching the core bit to the core drill".

Procedure:

Risk of unintentional movement of the feed carriage due to gravity!

The feed carriage must always be secured against unintentional movement (locking lever in "Tight" position).

☒ Set the feed slide of the core drill rig to an upper or rear position so that there is sufficient space for mounting the core drill.

☒ Secure the feed slide of the core drill rig on the guide stand using the locking lever. To do this, move the locking lever of the feed carriage to the "Tight" position.

☒ Attach the core drill to the core drill rig using 4 hexagon socket screws M8x35 and feather key 10 x 8 x 100.

☒ Check that the core drill is securely attached to the core drill rig.

↳ Core drill can now be used on the core drill rig.

5.4.7 Establish the water supply for the core drill

The core drill may only be used in the wet process! The water is used to cool the core bit so that it does not heat up excessively during drilling, which would cause increased wear.

ⓘ Only clean water may be used.

Only clean and dust-free hoses and couplings may be used.

The maximum water pressure must not exceed 3 bar.

ⓘ As the core drill may only be used in wet processes, we recommend the use of an additional water collection ring to protect the machine and the working environment.

Kernlochbohrer GmbH offers an extensive range of tools and accessories for core drills. The webshop http://www.kernlochbohrer.com is available for information and ordering.

Procedure:

☒ Close the ball valve on the water connection (in the transverse position).

☒ Connect the quick-release coupling of the core drill to a water hose.

5.4.8 Establish the electrical connection of the core drill

Please note the following points:

- Comply with the electrical connection values of the core drill.
  📖 See chapter 3 "Technical data".
- Before connecting the core drill to the power supply, ensure that the core drill is switched off.
- The mains cable and mains plug must not be damaged.
- Damaged mains plugs may only be replaced by Kernlochbohrer GmbH or a qualified electrician.
- The core drill is equipped with a type F mains plug (CEE 7/4). The core drill may only be operated from an earthed socket (CEE 7/3) that is appropriately earthed.
- To protect the operator and reduce the risk of electric shock, the core drill is equipped with a personal protection circuit breaker (PRCD) integrated into the mains cable. The core drill may only be connected to the mains using this personal protection circuit breaker.
- After inserting the mains plug into the socket, the personal protection switch must be subjected to a test run. If the personal protection switch does not trip, the core drill must be disconnected from the mains again and checked by a qualified electrician.
- Never touch the mains plug with wet hands.
- The mains plug and socket must be clean and dust-free.
- The supplied electrical voltage must not deviate by more than 5% from the nominal value. Excessive voltages can lead to irreparable damage to the core drill.
- When operating the core drilling machine with power generators, voltage peaks must not occur.
- When using extension cables, the cable cross-section must be suitable for the power consumption of the core drill.
- When using a cable reel, the cable must always be unrolled completely.
- If the core drill is used outdoors with an extension cable, the extension cable must be approved for outdoor use.
- Grasp the mains plug to remove the mains cable from the socket. Do not pull on the mains cable.

- Do not use the mains cable to pull or transport the core drill and keep it away from heat, solvents and oils, sharp edges and moving parts.
- If the core drill is not to be used for a longer period of time, switch off the core drill and remove the mains plug from the socket.

5.4.9 Use drilling system

Before starting or starting up the core drill, ensure that tools used to mount the core bit have been removed from the drill spindle.

Auxiliary means:

Open-end spanner with width across flats SW 32

Prerequisites:

☑ Visual inspection of the drilling system carried out.

☑ Core drill rig attached.

☑ Core drill rig aligned.

☑ Drill bit mounted on the core drill.

☑ Core drill attached to the core drill rig.
🕮 See chapter 5.4.6 "Attaching the core drill to the core drill rig".

☑ Water supply to the core drill established.
🕮 See chapter 5.4.7 "Establish the water supply for the core drill".

☑ Electrical connection of the core drill established.
🕮 See chapter 5.4.8 "Establish the electrical connection of the core drill".

Procedure:

☒ Set the desired speed on the gear selector switch of the core drill according to the drill diameter.

📖 See chapter 3 "Technical data".

ⓘ The specified drilling diameters and speeds of the core drill are based on an average concrete hardness.

A lower gear should be selected for reinforced concrete in order to reduce the speed.

ⓘ The gear selector switch may only be operated when the core drill is switched off.

Turn the gear selector switch and allow it to engage in the desired position.

If the gear selector switch is stiff, turn the drill spindle slightly using an open-end spanner with a width across flats of 32 to enable gear selection.

☒ Carry out a function test of the personal protection circuit breaker (PRCD):

- ☒ Hold the personal protection switch in your hand and press the "TEST" button with your bare finger. Do not use gloves or other insulating objects.
- ↳ As soon as the personal protection switch is switched on, the electronics check whether the protective earth conductor (PE) is free of mains voltage.
- ☒ Switch off the personal protection switch by pressing the "RESET" button.
- ☒ Switch on the personal protection switch again by pressing the "TEST" button.
- ↳ The machine must now be able to be operated.

⚠ If the personal protection switch does not trip or repeatedly switches off when the machine is switched on, the entire combination must be checked by a qualified electrician.

Use of the machine in this condition is not permitted!

☒ Switch on the core drill at the on/off switch and let it run briefly: Check the concentricity of the core bit.

☒ Switch on the core drill at the on/off switch without load.

☒ Open the ball valve on the water connection.

☒ When water continuously emerges from the centre of the drill bit:

Start drilling carefully.

☒ When the cutting depth has reached 10 mm, the feed pressure can be increased.

ⓘ If you are drilling at too high a speed or too high a feed pressure, this can cause the drill bit to jam.

☒ During the drilling process, continuously observe the LED displays on the motor housing:

If the red ‘Overload’ LED lights up: Immediately reduce the feed pressure.

☒ Continuously monitor the speed of the core drill during the drilling process:

If the speed drops, reduce the feed pressure.

☒ If the feed rate decreases at the same feed pressure and the water emerging from the hole becomes clearer but is mixed with metal chips, the drill bit has hit reinforcing steel.

Reduce the feed pressure until the reinforcing bar is cut through.

☒ If wooden beams, thick asphalt or bitumen are cut through, increase the power supply to the core drill. Then reduce the feed pressure.

☒ If it is necessary to drill deeper than the effective length of the drill bit allows, an optional drill extension can be used.

☒ Continuously monitor the core drill during the drilling process:

If light smoke develops or the odour of an overloaded electric motor can be detected, relieve the core drill and withdraw it from the hole.

Then continue drilling slowly and carefully.

☒ When the end of the through-hole is almost reached:

Reduce the feed pressure until the core bit emerges on the opposite side.

5.4.10 Switch off the drilling system

Procedure:

☒ Switch off the motor of the core drill by pressing the on/off switch.

☒ Close the ball valve and disconnect the water supply.

☒ Remove the mains plug from the socket.

☒ Disconnect the core drill from the core drill rig.

☒ Remove the core drill rig.

☒ Remove the core bit from the core drill.

☒ Check the machine and core drill rig for dirt. If necessary, clean the machine and core drill rig.

📖 See chapter 6.3.1 "Cleaning and checking the drilling system".

5.4.11 Store drilling system

Procedure:

☑ Core drill switched off.

🕮 See chapter 5.4.10 "Switch off the drilling system".

☒ Clean the core drill and core drill rig and allow to dry completely.

🕮 See chapter 6.3.1 "Cleaning and checking the drilling system".

☒ Set the core drill rig down vertically and secure it against falling over.

☒ Store the core drill and core drill rig in a dry, cool place protected from moisture and direct sunlight.

☒ Secure the core drill and core drill rig against unauthorised use.

6 Maintenance

6.1 Notes on proper maintenance

Insufficient or improper maintenance can cause malfunctions and impair the operational safety and service life of the drilling system . Regular inspection and maintenance is therefore essential. We recommend that maintenance work is only carried out by trained personnel.

The contractually agreed warranty does not release the operator of the drilling system from the obligation to maintain the drilling system in accordance with the manufacturer's instructions from the time of commissioning. Kernlochbohrer GmbH is not liable for damage caused by a lack of maintenance.

6.2 Maintenance and inspection plan

The interval specifications refer to normal operating conditions. In more difficult conditions (heavy dust accumulation, etc.) and longer daily working times, the specified intervals must be shortened accordingly by the operator.

Only use the maintenance and inspection schedule as a guide! Be sure to follow the cross-references to the other chapters! They describe in detail how to carry out the individual tasks correctly and safely.

Interval	Category	Component	Activity	Chapter
1 day	Real time	Drilling system	Cleaning and testing	6.3.1
200 hours	Operating time	Core drill	Check transmission oil	6.3.2

6.3 Inspection and maintenance

6.3.1 Cleaning and checking the drilling system

Do not use sharp sponges or metal objects to clean the drilling system. These could damage the surface of the drilling system.

Do not use high-pressure cleaners, water jets or compressed air to clean the drilling system. The sharp water or air jet could damage the drilling system.

No corrosive, harmful or environmentally damaging substances may be used to clean the drilling system.

Interval:

1 day real time

Auxiliary means:

- The cleaning agent should be placed in a container with a mixture of water and mild detergent (e.g. washing-up liquid).
- Cloth and brush
- Water-resistant lubricating grease

Procedure:

☑ Machine switched off and mains plug removed from socket.

🕮 See chapter 5.4.10 "Switch off the drilling system".

☒ Clean dust and dirt from the core drill.

- Use a damp cloth dipped in water mixed with a mild detergent.
- No water may enter the interior of the core drill via the air inlet and outlet openings.

☒ Clean the air inlet and outlet openings of the core drill with a brush and damp cloth.

☒ Clean the core drill rig to remove dust and dirt.

Use a damp cloth dipped in water mixed with a mild detergent.

☒ Allow the core drill and core drill rig to dry completely.

Risk of unintentional movement of the feed carriage due to gravity!

The feed carriage must always be secured against unintentional movement (locking lever in "Tight" position).

☒ Check the function of the locking lever for securing the feed carriage on the guide stand.

📖 See chapter 4.4.1 "Securing feed slide on guide stand".

If the locking lever is in the "Tight" position, the feed carriage must not be moved using the feed lever!

This would damage the locking mechanism and the gear rack on the guide stand.

☒ Check the play of the feed carriage on the guide stand of the core drill rig:

To do this, move the locking lever to the "Loose" position.

If the feed carriage has play on the guide stand, adjust the four adjustable rollers one after the other:

- ☒ Secure the eccentric shaft (item 25 in the spare parts drawing) against turning using an Allen key.
- ☒ Tighten the hexagon nut (item 28 in the spare parts drawing) of the adjustable roller by turning it clockwise.
- ↳ The adjustable castor rests against the running surface of the guide upright again.

Then check the play of the feed carriage on the guide stand again.

If the play of the feed carriage cannot be sufficiently reduced by adjusting the adjustable rollers, the four rollers must be replaced.

☒ Check the tightness of all screws and nuts on the core drill and core drill rig. If necessary, tighten the screws and nuts.

☒ Check the condition and effectiveness of the water seals of the core drill. Replace damaged or worn water seals.

☒ Check the gear housing of the core drill for oil leaks. If oil leaks from the gearbox, contact Kernlochbohrer GmbH.

☒ Check the mains plug and mains cable of the core drill for damage. Have damaged parts replaced by a qualified electrician.

- ☒ Carry out a test run of the personal protection circuit breaker (PRCD) of the core drill. If the personal protection circuit breaker does not trip during the test run, have the device checked by a qualified electrician.
- ☒ Apply a thin layer of water-resistant grease to the external thread of the core drill spindle.
- ☒ Apply a thin layer of water-resistant grease to the toothed rack of the guide stand of the core drill rig.

6.3.2 Check the condition of the gear oil of the core drill

Interval:

200 hours operating time

Auxiliary means:

Plastic oil dipstick, diameter approx. 5 mm

Procedure:

☑ Machine switched off and mains plug removed from socket.
📖 See chapter 5.4.10 "Switch off the drilling system".

☑ Drill bit separated from the core drill.

☒ Set up the core drill with the drill spindle pointing upwards and secure it against falling over.

☒ Remove the M10x1 screw plug (position 22 in the spare parts drawing) from the gearbox housing.

☒ Remove a small amount of gearbox oil from the gearbox housing using an oil dipstick.

☒ Check the condition of the transmission oil on the oil dipstick.
Are many impurities visible in the transmission oil?
Change the transmission oil.
Gear oil to be used: Mobil Delvac Gear Oil 80W-90
Required quantity: 0.35 litres

☒ Check the condition of the screw plug seal. If necessary, replace the screw plug.

☒ Attach the screw plug to the gearbox housing.

☒ After recommissioning the core drill: Check the screw plug for leaks.

7 Troubleshooting

If a fault occurs during operation of the drilling system, please first try to rectify the fault yourself using the following information.

If you are unable to rectify the fault yourself, please contact Kernlochbohrer GmbH.

7.1 Core drill

Malfunction	Possible cause	Troubleshooting
Core drill does not start	Power supply interrupted	Plug in another electrical appliance and check the function of the power supply
	Mains plug not plugged in correctly.	Insert the mains plug correctly
	Personal protection switch not reset	Press the reset button on the personal protection switch
	Loose contact on the personal protection switch	Have the personal circuit breaker replaced by a qualified electrician
	Power cable or on/off switch damaged	Have the mains cable or on/off switch replaced by a qualified electrician
	Rotor or stator damaged	Have it checked by a qualified electrician and replaced if necessary
Leakage from water seals	Water seals worn out	Replacing water seals
Drill bit is stuck or jammed	Gear is not properly engaged	Turn the gear selector lever to the desired gear and allow it to engage
	Slipping clutch worn	Have the slipping clutch replaced

Malfunction	Possible cause	Troubleshooting
	High steel content in concrete or very hard material	After switching off the core drill, adjust the position of the core bit slightly using a spanner and tap the tube of the core bit carefully and gently with a wooden hammer handle until the stuck core bit comes loose. Slowly pull out the core bit and restart the machine
	Gearbox damaged	Have the gearbox replaced
	Rotor short-circuited or without contact	Check rotor connection. Have the rotor replaced if necessary
Drilling speed too slow	End of service life of drill bit reached or cutting segments broken off	Check drill bit and replace if necessary
	Too much cooling water leads to inefficient cutting of the cutting segments	Reduce water flow
	Blunt drill bit	Resharpen cutting segments
	High steel content in concrete or very hard material	Reduce the feed pressure to cut through steel or hard material. Then increase again
	Drilling angle adjusted	Realign the drilling angle so that the drill bit is perpendicular to the cutting surface
Drill spindle wobbles	Drill spindle worn	Have the drill spindle replaced

7.2 Core drill rig

Malfunction	Possible cause	Troubleshooting
Feed carriage wobbles	Wear and tear	Adjustable castors
Splined shaft is firmly seated	Fixed castors worn out	Replacing fixed castors
Splined shaft can be rotated freely	Toothed shaft and gear rack worn	Replace toothed shaft and gear rack
Locking lever cannot secure feed carriage	Locking mechanism defective	Replacing the locking mechanism
After replacing all rollers, the movement of the feed carriage is always unreliable	Worn guide stand	Replacing the guide stand

8 Spare parts

8.1 Core drill

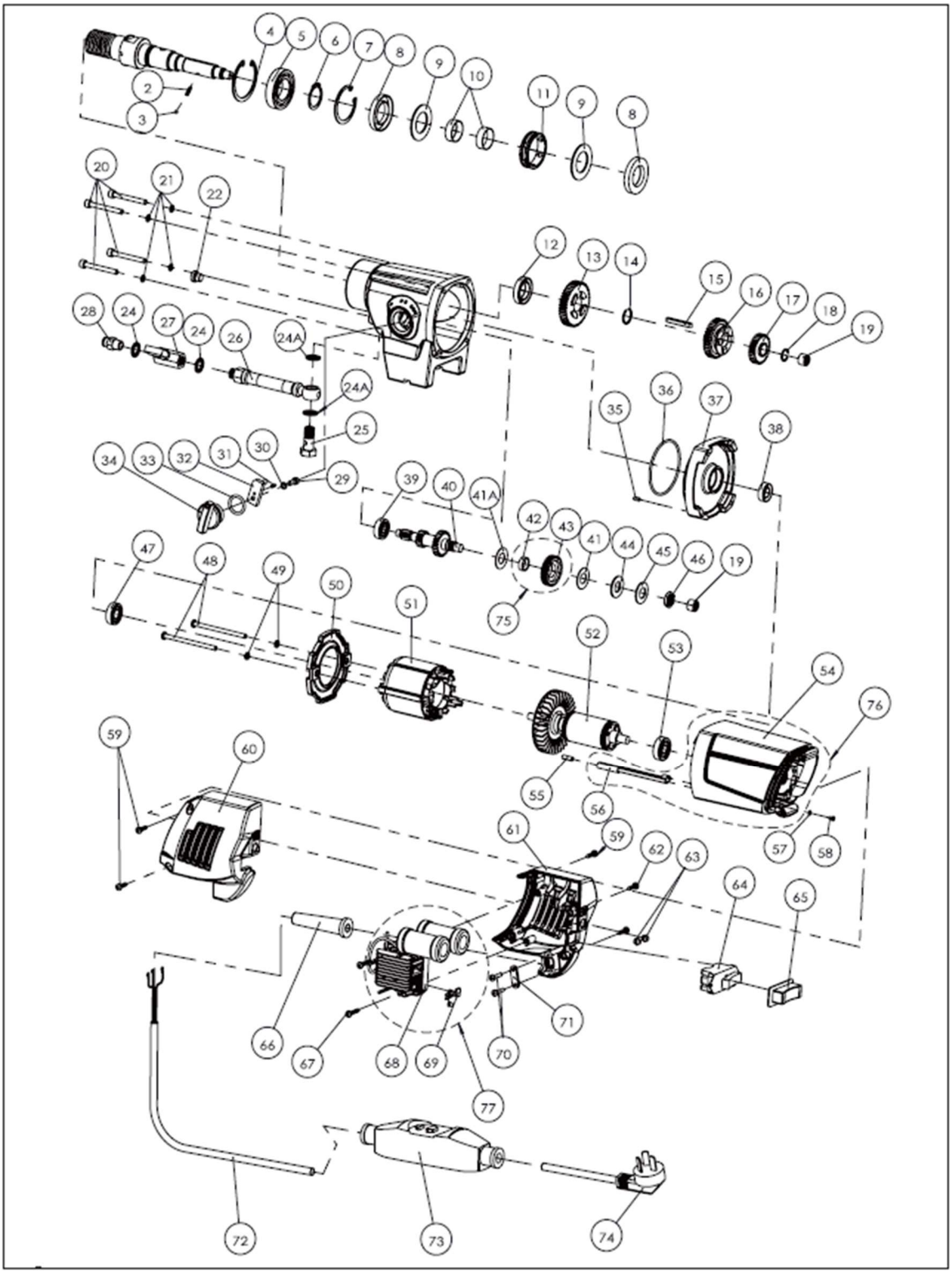

Pos.	Article name	No.
1	Spindle shaft 20CrMnTi	1
2	Pressure spring	1
3	Pressure spring	1
4	Inner circlip Ø52	1
5	Deep groove ball bearing 6028LLU	1
6	Outer circlip Ø28	1
7	Inner circlip Ø47	1
8	Shaft seal TC 28x47x7	2
9	Water ring seal	2
10	Water ring sleeve 28x26x9.5	2
11	Water ring bushing	1
12	Shaft seal TC 22x35x7	1
13	Circlip Ø18	1
14	Pinion Z39-M1.25	1
15	Parallel key 5x5x40	1
16	Pinion Z39-M1.25	1
17	Spur gear Z39-M1.25	1
18	Circlip Ø14	1
19	Drawn cup needle HK1010	2
20	Cheese head screw M5x50	4
21	Washer (Ø5xØ9x1)	4
22	Screw plug M10x1	1
23	Gearbox housing	1
24	Washer (12.7x19x1.5)	2
24A	Washer (13.8x20.6x2)	2
25	Hexagon socket head cap screw	1
26	Hose	1
27	Ball valve	1
28	Connection nipple	1
28A	O-ring Ø16xØ3.1 NBR	1
29	Cheese head screw M5x12	1
30	Washer Ø5	1
31	Bolt Ø3x8	1
32	Gear stick	1
33	O-ring (Ø26xØ3.1)	1
34	Selector lever	1
35	Bolt Ø4x8	1
36	O-ring (Ø72xØ2.5)	1
37	Gearbox cover	1
38	Shaft seal TC 12x24x7	1

Pos.	Article name	No.
39	Deep groove ball bearing 629Z	1
40	Pinion shaft (M1.25/Z24/15/8)	1
41	Copper friction disc T=1	1
41A	Copper friction disc T=2	1
42	Transmission shaft disc	1
43	Helical gear (Z35-M1-R.H.)	1
44	Clutch disc	1
45	Disc spring T=2mm	1
46	Hexagon nut M12x1.25	1
47	Deep groove ball bearing 6001V	1
48	Phillips screw M5x8	2
49	Washer (Ø5xØ9x1)	4
50	Wind deflector	1
51	Stator assembly	1
52	Bearingless rotor unit	1
53	Deep groove ball bearing 6200V	1
54	Motor housing	1
55	Spring-loaded ball plunger	1
56	Earthing wire inserts	1
57	Outer toothed seal M4	1
58	Round-head screw M4x6	1
59	Round-head screw M4x25	4
60	Left rear cover	11
61	Right rear cover	1
62	Round-head screw M4x30	1
63	LED socket	2
64	On/off switch	1
65	Switch cover	1
66	Mains cable gland	1
67	Flat head screw M4x20	2
68	Motor PCBA	1
69	LED red/yellow	1
70	Round-head screw M4x16	2
71	Cable clamp	1
72	Mains cable	1
73	Personal protection circuit breaker (PRCD)	1
74	Mains plug	1
75	Helical gear group	1
76	Motor housing group	1
77	EMC control module	1

8.2 Core drill rig

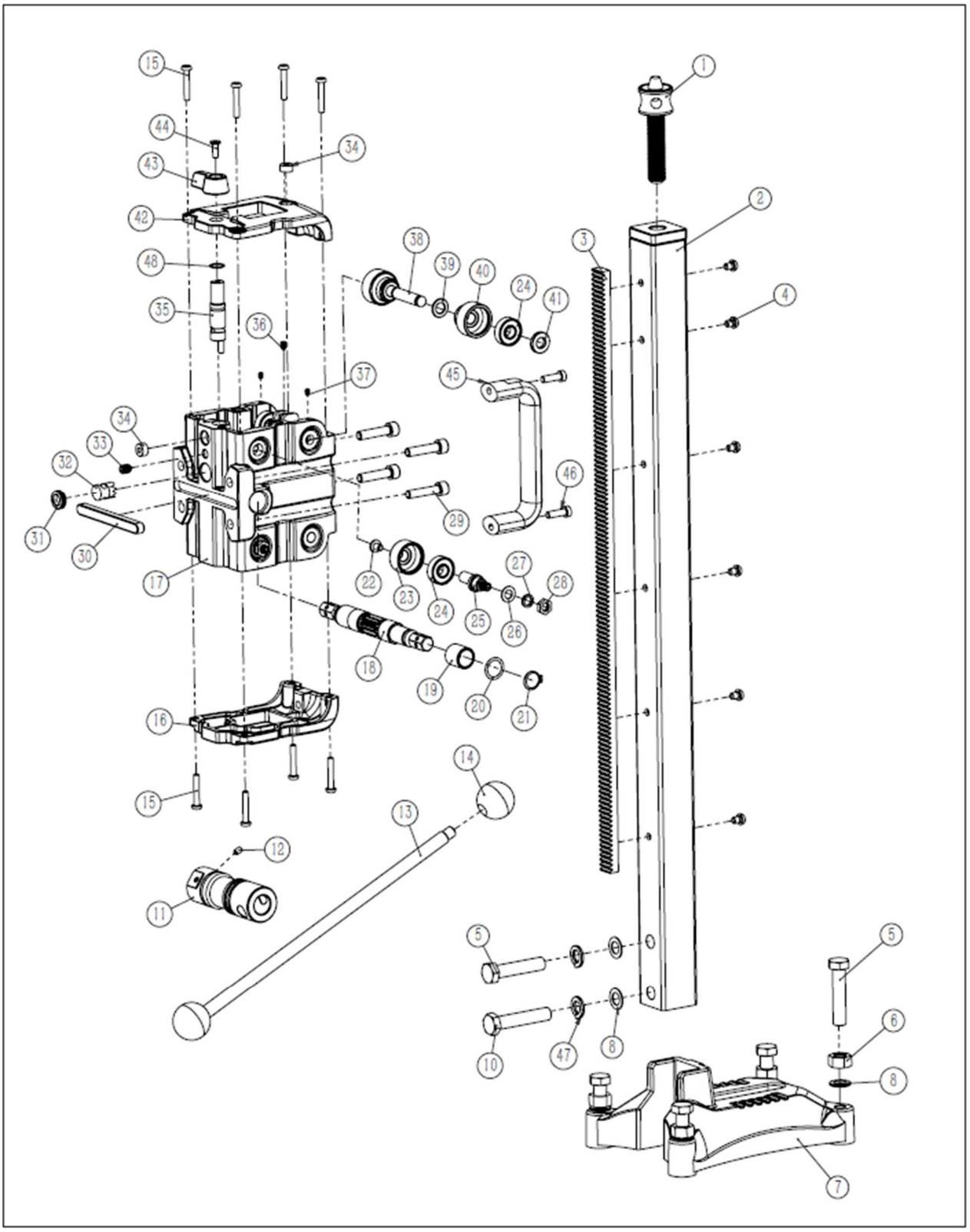

Pos.	Article name	No.
1	Clamping screw	1
2	Guide stand	1
3	Toothed rack	1
4	Cylinder head screw M6x8	6
5	Cylinder head screw M12x55	5
6	Hexagon nut M12	4
7	Foot	1
8	Disc 12x20x1	2
10	Cylinder head screw M12x55	1
11	Adjustable sleeve	1
12	Grub screw M5x8	1
13	Lever	1
14	Rubber ball	2
15	Cylinder head screw M5x30	8
16	Lower part of housing	1
17	Feed slide	1
18	Splined shaft	1
19	Bronze bush 16x20x20	2
20	Shaft seal 16x27x0.8	2
21	Circlip Ø16	2
22	Cylinder head screw M6x8	4
23	Eccentric roller	4
24	Deep groove ball bearing 6000-2RZ	4
25	Eccentric shaft	4

Pos.	Article name	No.
26	Disc 15x8.6x1	4
27	Spring washer Ø8	4
28	Hexagon nut M8	4
29	Cylinder head screw M8x35	4
30	Parallel key 10x8x100	1
31	Screw plug M18x1.5	1
32	Locking knob	1
33	Grub screw M8x10	1
34	Dragonfly	2
35	Locking shaft	1
36	Grub screw M5x8	2
37	Grub screw M4x6	4
38	Roller shaft	2
39	Disc 10x18x1.5	4
40	Track roller	4
41	Spacer	4
42	Upper part of housing	1
43	Locking button	1
44	Cylinder head screw M5x14	1
45	Handle	1
46	Cylinder head screw M6x20	2
47	Spring washer Ø12	2
48	O-ring 14x1	1

9 EU Declaration of Conformity

The manufacturer/distributor

Kernlochbohrer GmbH
Geigersbühlweg 52
72663 Großbettlingen
Germany

hereby declares that the following product

Product description:	**Diamond core drilling system**
Type:	**DKB252/Xtrem & KBS252/Light**

complies with all relevant provisions of the applicable legal regulations (hereinafter) - including their amendments valid at the time of the declaration. This declaration of conformity is issued under the sole responsibility of the manufacturer. This declaration relates only to the machine in the state in which it was placed on the market; parts and/or modifications subsequently fitted by the end user are not taken into account.

The following legal provisions were applied:

Machinery Directive 2006/42/EU

Electromagnetic Compatibility Directive 2014/30/EU

The following harmonised standards were applied:

EN ISO 12100:2010

EN 62841-1:2015 + A11:2022

EN 62841-3-6:2014 +A12:2022

EN IEC 55014-1:2021

EN IEC 55014-2:2021

EN IEC 61000-3-2:2019 +A1:2021

EN 61000-3-3: 2013 +A2:2021

Name and address of the person authorised to compile the technical documentation:

Kernlochbohrer GmbH
Geigersbühlweg 52
72663 Großbettlingen
Germany

Großbettlingen 2025-05-25
Kernlochbohrer GmbH

Guido Pillat
Managing Director / Chief Executive Officer