KERNLOCHBOHRER®
PROFESSIONAL POWER TOOLS



Operating instructions

Building dryer
BT158XL

BA-05-000001-05-EN

Scope of application

These Operating instructions only apply to the machine labelled on the cover sheet.

Check the machine model using the machine's rating plate.

Original instructions / translation of the original instructions

In accordance with the EU Machinery Directive, the German copy of these Operating instructions is the original instructions.

Copies in other languages are translations of the original instructions.

Kernlochbohrer GmbH
Geigersbühlweg 52
72663 Großbettlingen
Germany
Phone: +49 (0)70 22 / 50 34 900
E-mail: info@kernlochbohrer.com
Internet: http://www.kernlochbohrer.com

© Kernlochbohrer GmbH

This documentation is protected by copyright.

All rights to this documentation, in particular the right of reproduction, distribution and translation, are reserved by Kernlochbohrer GmbH, even in the case of applications for industrial property rights. No part of this documentation may be reproduced in any form by any means, electronic or mechanical, or processed, duplicated or distributed using electronic systems without the express written permission of Kernlochbohrer GmbH.

Errors and technical changes excepted.

Kernlochbohrer GmbH is not liable for any errors in this documentation. Liability for direct or indirect damages arising in connection with the delivery or use of this documentation is excluded to the extent permitted by law. Furthermore, Kernlochbohrer GmbH cannot be held liable for damages resulting from the infringement of patent and other rights of third parties.

The function of the machine is limited to the functions described in the associated technical documentation.

Table of contents

1 Information and support 6
1.1 Thanks to the buyer 6
1.2 Using the Operating instructions 6
1.3 Changes 6
1.4 Explanation of symbols 7
1.5 Guarantee 7
1.6 Environmental protection 8
1.6.1 Disposal of the product 8
1.6.2 Disposal of the packaging 8
1.7 Service 9
2 Security 10
2.1 General information 10
2.2 Intended use 10
2.3 Safety regulations for the operator 11
2.3.1 Organisational safety measures 11
2.3.2 Changes to the machine 11
2.3.3 Spare parts 12
2.3.4 Personnel 12
2.4 Safety regulations for staff 13
2.4.1 Safe behaviour 13
2.4.2 Safe operation 14
2.5 Safety during maintenance 15
2.5.1 General information 15
2.5.2 Cleaning 15
3 Technical data 16
4 Machine description 17
4.1 Machine components and operating devices 17
4.2 Display 18
4.2.1 On/off button 19
4.2.2 Arrow buttons 19

4.2.3 Operating mode button 19
4.3 Circuit diagram 20
4.4 Scope of delivery 20
5 Utilisation of the machine 21
5.1 Specific precautions 21
5.1.1 Building dryer 21
5.1.2 Machines with flammable refrigerant 22
5.2 Transport of the machine 23
5.3 Unpacking the machine 23
5.4 Commissioning the machine 24
5.5 Working with the machine 24
5.5.1 Visual inspection of the machine 24
5.5.2 Electrical connection 25
5.5.3 Switch on the machine 26
5.5.4 Switch off the machine 29
5.5.5 Store the machine 29
6 Maintenance 30
6.1 Notes on proper maintenance 30
6.2 Maintenance and inspection plan 30
6.3 Inspection and maintenance 31
6.3.1 Cleaning the machine 31
6.3.2 Clean air filter and filter screen 33
7 Troubleshooting 35
7.1 Fault table 35
7.2 Fault „FU“ 36
8 Spare parts 37
9 EU Declaration of Conformity 38

1 Information and support

1.1 Thanks to the buyer

Thank you for purchasing a machine from Kernlochbohrer GmbH.

Please read the Operating instructions carefully and observe the safety instructions. By following the Operating instructions, you will be able to fully utilise the outstanding performance of our product.

If you have any questions regarding the operation of the machine, please contact Kernlochbohrer GmbH directly. We are available to answer your questions at any time.

1.2 Using the Operating instructions

The machine is intended for professional use and may only be operated by trained personnel. Strictly adhere to the instructions in the Operating instructions.

Our company declines all responsibility in the event of non-compliance with the Operating instructions, which may result in injury or damage to the machine.

The Operating instructions are indispensable for using the machine. The Operating instructions must therefore always be kept close to the machine and be accessible to the intended personnel at all times.

In addition to the Operating instructions, the generally applicable and local regulations for accident prevention and environmental protection must be provided; compliance with these regulations must be checked regularly.

1.3 Changes

Kernlochbohrer GmbH reserves the right to change the design and appearance of the products and their Operating instructions. Future changes to the Operating instructions will be made without prior notice.

1.4 Explanation of symbols



The symbol draws your attention to dangers that you must be aware of when carrying out the following work in order to avoid injury to yourself, other persons or damage to property.

📖 Cross-reference to another point in the Operating instructions.

☑ Prerequisite for an action.

☒ Action to be performed.

↳ Behaviour of the machine that is to be expected as a result of the preceding action.

ⓘ Background information or reference to special features.

1.5 Guarantee

In accordance with Kernlochbohrer GmbH's general terms of delivery, a warranty period of 12 months applies to material defects in business transactions with companies (proof by invoice or delivery note).

Damage caused by natural wear and tear, overloading or improper handling is excluded.

Damage caused by material or manufacturer defects will be rectified free of charge by repair or replacement. Complaints can only be recognised if the device is sent to Kernlochbohrer GmbH undismantled.

Wear parts are excluded from the warranty.

1.6 Environmental protection

1.6.1 Disposal of the product

Follow national regulations on environmentally friendly disposal and recycling of used machines and accessories.

For EU countries only: Do not dispose of the machine with household waste! In accordance with European Directive 2012/19/EU on waste electrical and electronic equipment and its transposition into national law, used power tools must be collected separately and recycled in an environmentally friendly manner.

The propane refrigerant contained in the machine must be disposed of properly in accordance with national legislation by companies with appropriate certification.

1.6.2 Disposal of the packaging

The packaging is made from recyclable materials. They must be disposed of in accordance with their labelling and municipal guidelines.

ⓘ The machine was transported in a plastic bag.
Keep the plastic bag in order to be able to store the machine in it later.

1.7 Service

Precise information and specific questions allow faults to be rectified quickly, make it easier to order spare parts and prevent incorrect deliveries.

Before contacting the service, please collect the following data first.

The model designation must be stated in all enquiries and orders. This information can be found on the rating plate of the machine.

In the event of malfunctions, further information is required: type and extent of the malfunction, accompanying circumstances, suspected cause.

When ordering spare parts, the following is required: Quantity and item number in the exploded drawing in these Operating instructions.

Contact details:

Kernlochbohrer GmbH
Geigersbühlweg 52
72663 Großbettlingen
Germany
Phone: +49 (0)70 22 / 50 34 900
E-mail: info@kernlochbohrer.com
Internet: http://www.kernlochbohrer.com

2 Security

2.1 General information

The machine was built according to the state of the art and in compliance with the applicable laws, standards and safety regulations. Nevertheless, the use of the machine can result in hazards for the user or third parties as well as damage to the machine and other property.

The machine may only be used if it is in perfect working order and in accordance with its intended use and in a safe and hazard-conscious manner.

If the machine is damaged or malfunctions, switch it off immediately, secure it against being switched on again and repair it or arrange for it to be repaired.

2.2 Intended use

The machine is intended exclusively for dehumidifying the air in indoor spaces (such as building sites, cellars, garages).

The machine may only be used within the limits of its technical data. This information, for example performance data and ambient conditions, can be found in the "Technical data" chapter.

Any other use or use beyond this is considered improper use - risk of accident! Kernlochbohrer GmbH is not liable for any resulting damage. The risk is borne solely by the operator.

Intended use also includes observing the operating instructions and complying with the prescribed maintenance intervals.

2.3 Safety regulations for the operator

2.3.1 Organisational safety measures

The Operating instructions must always be available for the operating and maintenance personnel. It must therefore always be kept at the machine's place of use.

The regulations on accident prevention and environmental protection applicable at the machine's place of use must also be available. The operator of the machine must regularly check compliance with these regulations.

The use of sound-emitting machines may be limited in time by national or local regulations.

The machine must not be operated in potentially explosive atmospheres.

All safety and danger notices on the machine must be legible and must not be removed.

The protective equipment required to operate the machine must be provided by the operator. The operator must ensure that the protective equipment is used properly by the personnel.

Operating and auxiliary materials, such as lubricants or cleaning agents, must be selected in such a way that the limit values for hazardous substances applicable at the place of use are complied with. The regulations for environmental protection and disposal applicable at the place of use must be complied with.

2.3.2 Changes to the machine

The operator may not make any modifications to the machine without written authorisation from Kernlochbohrer GmbH. If the operator carries out modifications without authorisation, the warranty becomes void. Kernlochbohrer GmbH is not liable for damage caused by unauthorised modifications.

2.3.3 Spare parts

Spare parts must comply with the properties defined by Kernlochbohrer GmbH. This is always guaranteed for spare parts supplied by Kernlochbohrer GmbH. Kernlochbohrer GmbH is not liable for damage caused by the use of unsuitable spare parts.

2.3.4 Personnel

All persons who are authorised to commission, operate and maintain the machine must have read and understood the Operating instructions beforehand.

The machine may only be operated by persons who have been adequately instructed beforehand.

The machine may only be serviced by persons who have completed the appropriate specialised training for this activity.

Minors are not permitted to work with the machine. Young people over the age of 16 who are trained under supervision are exempt from this regulation.

2.4 Safety regulations for staff

2.4.1 Safe behaviour

All persons responsible for commissioning, operating and maintaining the machine must have read and understood the Operating instructions beforehand.

The machine may only be operated by persons who have been adequately instructed beforehand.

The machine may only be serviced by persons who have completed the appropriate specialised training for this activity.

Minors are not permitted to work with the machine. Young people over the age of 16 who are trained under supervision are exempt from this regulation.

Any work on and with the machine that could jeopardise safety must be avoided.

All safety and danger notices on the machine must be legible and must not be removed.

2.4.2 Safe operation

Operating the machine requires the full concentration and ability of the personnel. Persons who are overtired, unable to concentrate or under the influence of alcohol, drugs or medication must not work on or with the machine.

Before using the machine, check that it is in perfect condition. If the machine is damaged, it must not be used. Then secure the machine against use and repair it or arrange for it to be repaired.

In order not to jeopardise the functionality and safety of the machine, covers or other components of the machine must not be removed.

Before starting or starting up the machine, ensure that persons are not endangered by the starting machine.

Operating elements must not be operated thoughtlessly or wilfully. This could result in personal injury or damage to the machine.

Air inlet and outlet openings must not be covered during use.

Never immerse the machine in water.

The machine must be cleaned regularly so that dirt does not accumulate. All operating elements and handles must be kept clean, dry and free of grease.

When the machine is not in use, it must be parked in such a way that nobody is endangered. Secure the machine against unauthorised use.

2.5 Safety during maintenance

2.5.1 General information

The machine may only be serviced by persons who have completed the appropriate specialised training for this activity.

The maintenance activities and intervals specified in the Operating instructions must be observed.

Workshop equipment appropriate to the type of work is required to carry out maintenance activities.

The following safety precautions must be taken before starting maintenance work:

- Position the machine so that the surgical site is easily accessible.
- Set the machine to the corresponding operating status.

After completion of maintenance activities:

- Assemble the machine completely.
- If operating elements or safety devices have been removed, they must be refitted and their function checked.
- Retighten loosened screw connections. Re-apply the screw locks.

2.5.2 Cleaning

Do not use any corrosive, harmful or environmentally damaging substances to clean the machine.
Dispose of cleaning agents in an environmentally friendly manner.

Under no circumstances should high-pressure cleaners, water jets or compressed air be used to clean the machine.

3 Technical data

Article number	6575
Dehumidification performance (at 30°C / 80% humidity)	158 dm³/24h
Air circulation	1200 m³/h
Recommended room area	80 m² to 100 m²
Recommended room volume	200 m³ to 250 m³
Power consumption	1650 W
Tension	230 V ±5% / 50 Hz
Power consumption	7 A
Refrigerant	Propane (R290)
Refrigerant quantity	380 g
Width	500 mm
Depth	525 mm
Height	1100 mm
Weight	50 kg
Type of the mains cable	H05RN-F 3G 0,75
Length of the mains cable	1,8 m
Condensate hose	L = 1 m | D = 8 mm | d = 6 mm
Permissible ambient temperature	5°C to 35°C
Permissible relative humidity	30% to 80%
Sound power level L_{weq}	55 dB(A) - 60 dB(A)

4 Machine description

4.1 Machine components and operating devices

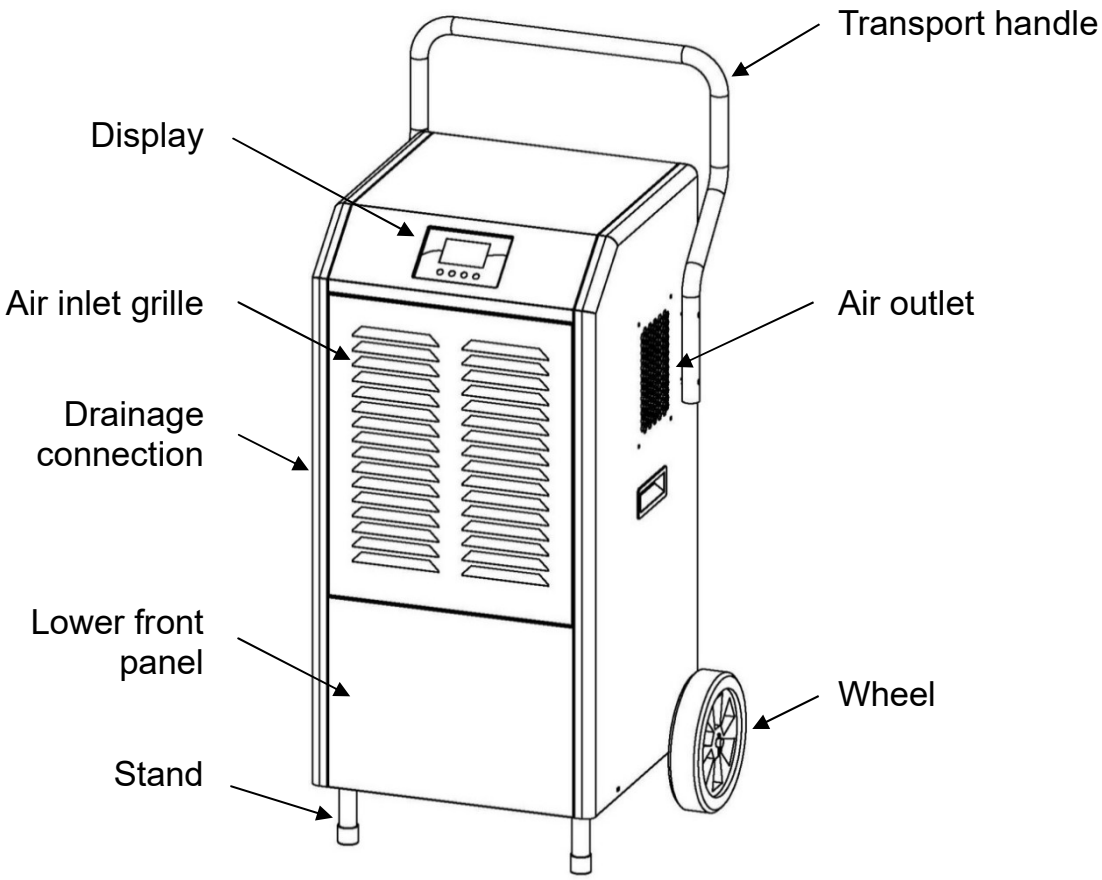

4.2 Display

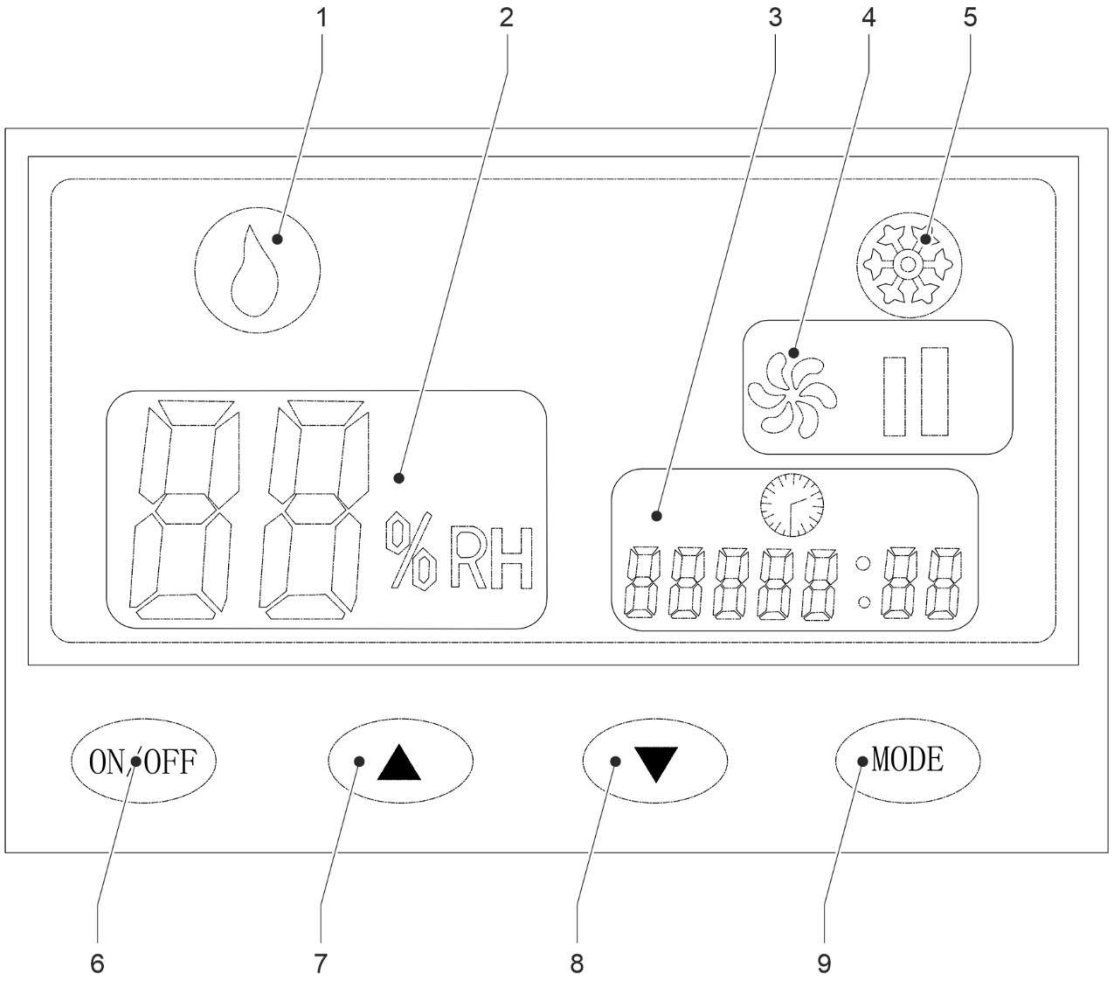

1 „Dehumidification mode“ display

2 „Humidity“ display

3 „Time“ display (remaining running time, duration until start and operating hours counter)

4 „Airflow speed“ display

5 „Automatic de-icing" display

6 On/off button

7 „Increase“ arrow button

8 „Reduce“ arrow button

9 Operating mode button

4.2.1 On/off button

The machine is switched on and off using the on/off button (labelled ON/OFF).

4.2.2 Arrow buttons

Various setting values can be reduced or increased using the "Reduce" (labelled ▼) and "Increase" (labelled ▲) arrow buttons.

4.2.3 Operating mode button

Each time you press the operating mode button (labelled Mode), you can switch between the following settings:

- Desired humidity value
- Desired running time or duration until start (in steps of one hour / maximum 24 hours)

  ⓘ If no specification is made for the desired running time, the machine runs in continuous operation.
- Air flow speed in two stages

If the operating mode button is pressed for 10 seconds, the following settings can be changed:

- Defrosting time
- Compressor running time



Kernlochbohrer GmbH recommends not to change these settings, as they have been optimised at the factory.

4.3 Circuit diagram

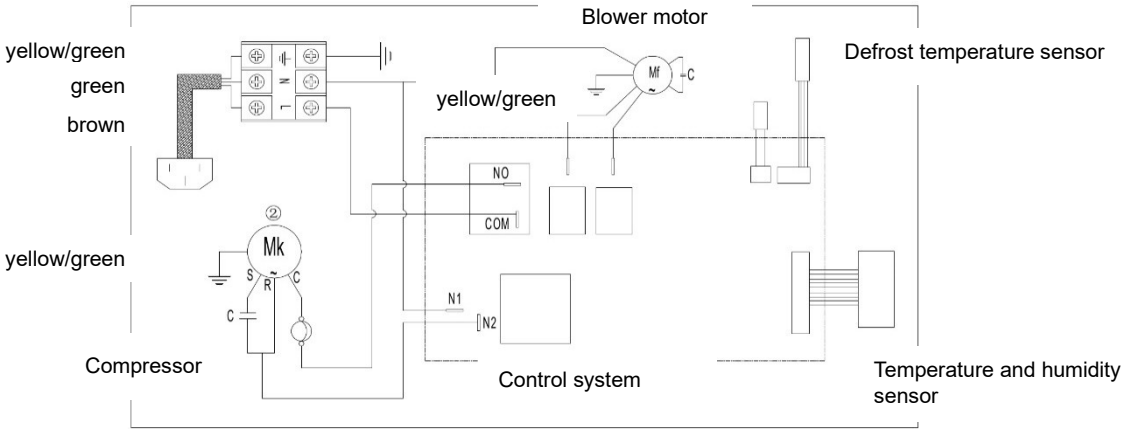

4.4 Scope of delivery

The scope of delivery of the machine includes the following components:

- Building dryer
- Transport handle with 4 fastening screws
- Condensate hose (length 1 m)
- Operating instructions

5 Utilisation of the machine

5.1 Specific precautions

5.1.1 Building dryer



Danger of electric shock!

The machine does not have the appropriate degree of protection and must therefore not be operated in wet rooms (e.g. bathrooms or laundry rooms).

The machine may only be operated indoors.

The air inlet and air outlet of the machine must be at least 50 cm away from walls and similar components during operation.

During operation, the machine must not be exposed to direct sunlight, strong draughts or splashing water.

The machine must not be operated in a puddle of water or near heat sources (heaters, ovens, etc.).

The machine must not be used if there is a risk of frost.

To avoid damage, do not place any objects on the machine.

If a fault occurs during operation of the machine (e.g. smell of burning), switch off the machine immediately and disconnect the mains plug from the socket. Otherwise a fire, electric shock or other incident could occur. The machine must not be switched on again until the fault has been rectified and the machine is functioning correctly.

The room air to be dehumidified must not be contaminated with solvents or other chemicals. This could irreparably damage the machine.

The machine's power cable must be kept away from heat, oil, sharp edges and moving parts. A damaged power cable poses a serious risk of electric shock.

5.1.2 Machines with flammable refrigerant

The machine may only be installed in rooms in which any escaping refrigerant cannot accumulate. This prevents ignition of the refrigerant by ignition sources such as electric cookers or ovens.

The machine may only be set up in rooms where there are no sources of ignition.

The refrigerant used, propane (R290), is colourless and odourless and therefore cannot be detected without suitable measuring equipment.

The applicable national or local regulations for the use of machines with flammable refrigerant must be complied with.

The machine may only be operated or stored in rooms with an area of at least 15 m².

The refrigerant circuit is a hermetically sealed and maintenance-free system and may only be repaired by specialised personnel for refrigeration and air conditioning technology.

Persons who carry out work on the refrigerant circuit must have a certificate of competence that proves their expertise in the safe handling of refrigerants.

Hazards due to the refrigerant propane (R290)

Hazard warnings	H220	Extremely flammable gas
	H280	Contains pressurised gas, can explode when heated
Safety instructions	P210	Keep away from heat, hot surfaces, sparks, open flames and other ignition sources. Do not smoke.
	P377	Fire in case of gas leakage: Do not extinguish until leakage can be stopped without danger.
	P381	Remove all sources of ignition if safe to do so.
	P403	Store in a well-ventilated place.

5.2 Transport of the machine

Before transporting the machine:

- Switch off the machine.
- Remove the mains plug from the socket.
- Wind the mains cable around the winding frame on the back of the machine.
- Remove the condensate hose from the drainage connection, empty it completely and wrap it around the winding frame.

The machine may be tilted by a maximum of 45° from the vertical during transport.

If the machine has been accidentally tilted by more than 45°, set up the machine vertically and wait 12 hours before switching on the machine.

After transporting the appliance, place it vertically again and secure it against falling over.

5.3 Unpacking the machine

Procedure:

☒ Remove the machine and accessories from the packaging.

☒ Remove the packaging completely from the machine.

☒ Unwind the mains cable completely. The mains cable and mains plug must not be damaged.

ⓘ The machine was delivered in a plastic bag.
Keep the plastic bag in order to be able to store the machine in it later.

5.4 Commissioning the machine

Procedure:

☑ Machine unpacked.

☒ Place the machine on its feet and wheels.

☒ Attach the Transport handle to both sides of the machine housing with 2 screws each.

☒ Ensure that the air filter is installed at the air inlet.

☒ Attach the condensate hose (D = 8 mm | d = 6 mm) to the drainage connection.

ⓘ Maximum hose length: 20 m.
Maximum height difference from the drainage connection to the free end of the condensate hose: 2 m.

5.5 Working with the machine

5.5.1 Visual inspection of the machine

Before working with the machine, it must be visually inspected:

- Check the general condition and cleanliness of the machine.
- Check that all covers and machine components are present.
- Check the tightness of all screws.
- Air inlet and outlet openings must not be dirty or covered.
- The mains cable and mains plug must not be damaged.

5.5.2 Electrical connection



Danger of electric shock!

The machine does not have the appropriate degree of protection and must therefore not be operated in wet rooms (e.g. bathrooms or laundry rooms).

Please note the following points:

- Comply with the electrical connection values of the appliance.

  📖 See chapter 3 "Technical data".

- The mains cable and mains plug must not be damaged.
- Damaged mains cable or damaged mains plug may only be replaced by Kernlochbohrer GmbH or a qualified electrician.
- The mains plug and socket must be clean and dust-free.
- The supplied electrical voltage must not deviate by more than 5% from the nominal value. Excessive voltages can lead to irreparable damage to the machine.
- When operating the machine with power generators, voltage peaks must not occur.
- When connecting the machine to the mains, a residual current device (RCD) with a maximum tripping current of 30 mA must be connected upstream.
- The machine is supplied with a type F mains plug (CEE 7/4). It may only be operated with the corresponding safety sockets (CEE 7/3).
- When using extension cables, the cable cross-section must be suitable for the power consumption of the machine.
- When using a cable reel, the cable must always be unrolled completely.
- To remove the mains plug from the socket, grasp the mains plug. Do not pull on the cable.
- If the machine is not to be used for a longer period of time, switch off the machine and remove the mains plug from the socket.

5.5.3 Switch on the machine



The machine may only be operated or stored in rooms with an area of at least 15 m²



The machine may be tilted by a maximum of 45° from the vertical during transport and operation.
If the machine has been accidentally tilted by more than 45°, set up the machine vertically and wait 12 hours before switching on the machine.

Procedure:

☑ Commissioning of the machine.

☑ Visual inspection of the machine carried out.

☒ Close the windows and doors of the room to be dehumidified.

☒ Set up the machine on a level surface in a vertical position.



If the machine tips over, coolant could escape and cause damage to the machine or other objects. This could also cause a fire or the risk of electric shock.

🕮 See also chapter 5.1 "Specific precautions".

☒ Make the electrical connection to the machine.

🕮 See chapter 5.5.2 "Electrical connection".

↳ The machine display shows

- Humidity of the ambient air.
- Number of operating hours performed (displayed in hhhhh:mm format in steps of 10 minutes).

☒ Route the free end of the condensate hose to a suitable drain or a sufficiently large collection container. Ensure that the condensate hose is laid without kinks.

☒ Press the on/off button.

↳ The machine confirms switching on with a signal tone.

☒ Press the operating mode button for the first time.

↳ The "Humidity" display flashes.

☒ Use the arrow buttons to set the desired humidity (30 - 80%).

☒ Wait 5 seconds after reaching the desired humidity setting.

↳ The desired humidity is saved.

↳ The "Humidity" indicator lights up continuously.

↳ The machine starts dehumidifying the ambient air. The "Humidity" display shows the change over time.

☒ Press the operating mode button a second time.

↳ The "Time" display flashes.

☒ Use the arrow buttons to set the desired running time of the machine (0 to 24 hours | in steps of one hour).

ⓘ If no specification is made for the desired running time, the machine runs in continuous operation.

☒ Wait 5 seconds after reaching the desired runtime setting.

↳ The desired runtime is saved.

↳ The "Time" display lights up continuously.

☒ Press the operating mode button for the third time.

☒ Use the arrow buttons to set the desired airflow speed (two different levels can be selected).

☒ Press the on/off button.

↳ The menu for setting the operating modes is exited.

☒ Press the on/off button again.

↳ The machine starts the dehumidification process with the set operating modes.

↳ The machine display shows

- Current humidity of the ambient air.
- Set airflow speed.
- Number of operating hours performed (displayed in hhhhh:mm format in steps of 10 minutes).
- Display "Dehumidification mode".

ⓘ When the humidity of the ambient air has reached the desired value, the machine switches off automatically.

ⓘ As an alternative to setting the desired running time, you can also set a time until the machine starts.

When the machine is switched on but not started:

- Press the operating mode button for 2 seconds.
- Use the arrow buttons to set the desired time until the machine starts (0 to 24 hours | in steps of one hour).

It is only possible to set either the running duration or the time until the machine starts! It is not possible to set both durations.

ⓘ The condensate separated by the machine is automatically pumped out by the condensate pump when a filling quantity of 150 ml is reached.

ⓘ When the ambient temperature is low, the machine starts the de-icing process automatically:

- The compressor is switched off.
- The fan continues to run.
- The "Automatic defrosting" indicator lights up.
- The "Airflow speed" indicator does not light up.

ⓘ When switching off and on again, the machine has a switch-on delay of 3 minutes.

ⓘ When the machine is switched off, the number of operating hours carried out is saved.

5.5.4 Switch off the machine

Procedure:

☒ Press the on/off button.
↳ The machine is switched off.

☒ Remove the mains plug from the socket.

☒ Wind the mains cable around the winding frame on the back of the machine.

☒ Drain the condensate hose completely, remove it from the drainage connection and wrap it around the winding frame.

☒ Check the machine for soiling. Clean the machine if necessary.

🕮 See chapter 6.3.1 "Cleaning the machine".

5.5.5 Store the machine



The machine may only be operated or stored in rooms with an area of at least 15 m²

🕮 See also chapter 5.1 "Specific precautions".

Procedure:

☑ Machine switched off.

🕮 See chapter 5.5.4 "Switch off the machine".

☒ Clean the machine and allow to dry completely.

🕮 See chapter 6.3.1 "Cleaning the machine".

☒ Clean air filter and filter screen.

🕮 See chapter 6.3.2 “Clean air filter and filter screen”.

☒ Park the machine vertically and secure it against falling over.

☒ Protect the machine from dust ingress with a plastic bag.

☒ Store the machine in a dry, cool place protected from moisture and direct sunlight.

☒ Secure the machine against unauthorised use.

6 Maintenance

6.1 Notes on proper maintenance

Insufficient or improper maintenance can cause malfunctions and impair the operational safety and service life of the machine. Regular inspection and maintenance is therefore essential. We recommend that maintenance work is only carried out by trained personnel.

The contractually agreed warranty does not release the operator of the machine from the obligation to maintain the machine in accordance with the manufacturer's instructions from the time of commissioning. Kernlochbohrer GmbH is not liable for damage caused by a lack of maintenance.

6.2 Maintenance and inspection plan

The interval specifications refer to normal operating conditions. In more difficult conditions (heavy dust accumulation, etc.) and longer daily working times, the specified intervals must be shortened accordingly by the operator.

Only use the maintenance and inspection schedule as a guide! Be sure to follow the cross-references to the other chapters! They describe in detail how to carry out the individual tasks correctly and safely.

Interval	Category	Component	Activity	Chapter
50 h	Operating time	Machine	Cleaning	6.3.1
200 h	Operating time	Air filter and filter screen	Cleaning	6.3.2

6.3 Inspection and maintenance

6.3.1 Cleaning the machine



Do not use sharp sponges or metal objects to clean the machine. These could damage the surface of the machine.

Do not use high-pressure cleaners, water jets or compressed air to clean the machine. The sharp water or air jet could damage the machine.

No corrosive, harmful or environmentally damaging substances may be used to clean the machine.

ⓘ If the machine is used in a very dirty environment, the maintenance interval may have to be shortened by the operator.

Interval:

50 h operating time

Auxiliary means:

- The cleaning agent should be placed in a container with a mixture of water and mild detergent (e.g. washing-up liquid).
- Cloth and brush

Procedure:

☑ Switch off the machine and remove the mains plug from the socket.

🕮 See chapter 5.5.4 "Switch off the machine".

☒ Clean the machine to remove dust and dirt.

- Use a damp cloth dipped in water mixed with a mild detergent.
- Water must not be allowed to enter the inside of the housing via the ventilation openings.

☒ Clean the air inlet and outlet openings with a brush and damp cloth.

☒ Allow the machine to dry completely.

6.3.2 Clean air filter and filter screen

ⓘ If the machine is used in a very dusty environment, the maintenance interval may have to be shortened by the operator.

A dirty air filter or a dirty filter screen reduces performance and shortens the service life of the machine.

The machine must not be operated without an air filter or filter screen.

Interval:

200 h operating time

Auxiliary means:

- Flat container for inserting the air filter; filled with warm water.
- Soft brush

Procedure:

☑ Switch off the machine and remove the mains plug from the socket.

🕮 See chapter 5.5.4 "Switch off the machine".

☑ Machine cleaned.

🕮 See chapter 6.3.1 "Cleaning the machine".

☒ Open and remove the air inlet grille.

☒ Remove air filter from air inlet grille.

☒ Place the air filter in a container with warm water and clean carefully with a soft brush.

☒ Dry the air filter thoroughly.

☒ Check the air filter for damage.
The edges and corners of the air filter must not be rounded or deformed.
Replace damaged air filter.

☒ Clean the air inlet grille and the inside of the air filter holder.
To do this, use a cloth dipped in water mixed with a mild detergent and then dry thoroughly.

☒ Insert the air filter into the air intake grille.

☒ Remove the lower front panel. To do this, remove the four fixing screws.

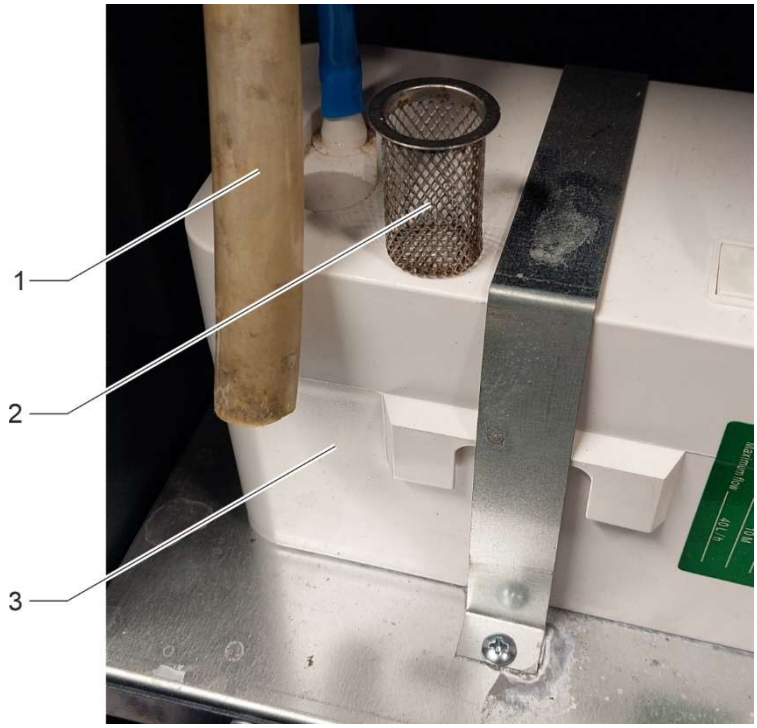

1 Condensate hose

2 Filter screen

3 Condensate pump

☒ Pull the lower end of the condensate hose out of the condensate pump.

☒ Remove the filter screen from the condensate pump.

☒ Clean the filter screen.

☒ Insert the filter screen into the condensate pump.

☒ Insert the condensate hose into the condensate pump.

☒ Attach the lower front panel with the fixing screws

☒ Attach and close the air inlet grille

7 Troubleshooting

7.1 Fault table

If a fault occurs during operation of the machine, please first try to rectify the fault yourself using the following information.

If you are unable to rectify the fault yourself, please contact Kernlochbohrer GmbH.

Malfunction	Possible cause	Troubleshooting
Machine does not run	No power supply	Establish power supply
	Mains plug not fully inserted	Insert the mains plug fully
Insufficient dehumidification	Air filter dirty	Clean the air filter
	Air inlet and/or air outlet blocked	Remove obstacles. Clean the air inlet and air outlet
	Room not closed	Close windows and doors
	Low room temperature	Increase room temperature.
Unusual noises	Machine not vertical	Set up the machine vertically
	Condensate drain blocked	Cleaning the condensate drain
Error "E1"	Coil sensor error	Please contact Kernlochbohrer GmbH
Error "E2"	Moisture sensor error	Please contact Kernlochbohrer GmbH
Error "E3"	Temperature sensor error	Please contact Kernlochbohrer GmbH
Error "E4"	Hot-cold system error	Please contact Kernlochbohrer GmbH
Error "E5"	Room temperature too high	Lower the room temperature. The machine then starts automatically
Error "FU"	Condensate pump fault	See chapter 7.2

7.2 Fault „FU“

If the error ‘FU’ appears on the display, there is a fault with the condensate pump.

Procedure:

ⓘ Maximum length of the condensate hose: 20 m.

Maximum height difference between the machine’s drain connection and the free end of the condensate hose: 2 m.

☒ Ensure that the maximum length of the condensate hose and the maximum height difference are not exceeded whilst the machine is in operation.

☒ Switch off the machine and unplug it from the mains socket.

🕮 See chapter Kapitel 5.5.4 „Switch off the machine“.

☒ Check the filter screen and the entire length of the condensate hose, from the condensate pump to the free outlet, for dirt or blockages.

If necessary, clean the filter screen and the condensate hose.

🕮 Seechapter 6.3.2 „Clean air filter“.

☒ If the filter screen and condensate hose were not dirty or blocked, the condensate pump must be replaced.

Ordering a new condensate pump from Kernlochbohrer:

🕮 See chapter 1.7 „Service“.

☒ After replacing the condensate pump, it is advisable to reset the control unit.

Resetting the control unit:

☒ Maschine einschalten.

🕮 See chapter 5.5.3 „Switch on the machine“.

☒ Press and hold the ‘Mode’ button on the display for 6 seconds.

↳ ‘P1’ then appears on the display.

☒ Briefly press the ‘Mode’ button to switch to P4.

☒ Press the ‘Increase ▲’ arrow key to set the value to ‘01’.

ⓘ The control system automatically saves the changes made.

8 Spare parts

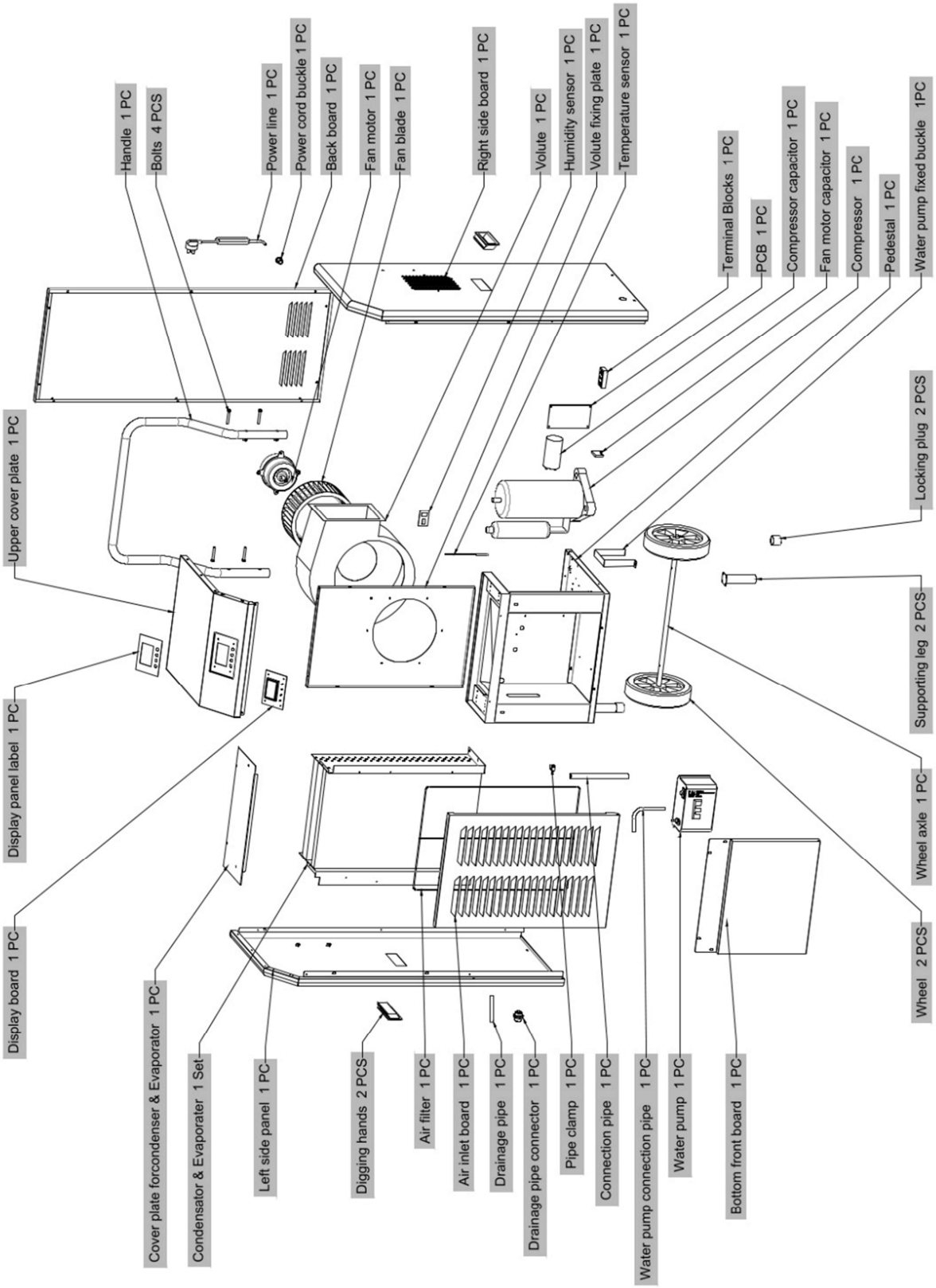

9 EU Declaration of Conformity

The manufacturer/distributor

Kernlochbohrer GmbH
Geigersbühlweg 52
72663 Großbettlingen
Germany

hereby declares that the following product

Product description:	**Building dryer**
Type:	**BT158XL**

complies with all relevant provisions of the applicable legal regulations (hereinafter) - including their amendments valid at the time of the declaration. This declaration of conformity is issued under the sole responsibility of the manufacturer. This declaration relates only to the machine in the state in which it was placed on the market; parts and/or modifications subsequently fitted by the end user are not taken into account.

The following legal provisions were applied:

Low Voltage Directive 2014/35/EU

Electromagnetic Compatibility Directive 2014/30/EU

Restriction of the use of certain hazardous substances in electrical and electronic equipment (RoHS) 2002/95/EC and amendment 2011/65/EU

Directive 2012/19/EU on waste electrical and electronic equipment (WEEEII)

The following harmonised standards were applied:

EN 60335-2-40: 2003 + A11:2004 + A12:2005 + A1:2006 + A2:2009 + A13:2012

EN 60335-1:2012 + A11:2014 + A13:2017 + A1:2019 + A14:2019 + A2:2019

EN 62233:2008

EN 55014-1:2017 + A11:2020

EN 55014-2:2015

EN IEC61000-3-2:2019

EN 61000-3-3:2013 + A1:2019

Name and address of the person authorised to compile the technical documentation:

Kernlochbohrer GmbH
Geigersbühlweg 52
72663 Großbettlingen
Germany

Großbettlingen 2026-11-23

Kernlochbohrer GmbH

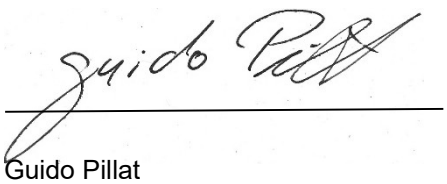

Guido Pillat

Managing Director / Chief Executive Officer