KERNLOCHBOHRER®
PROFESSIONAL POWER TOOLS

Operating instructions

Dry vacuum cleaner
TS38/HEPA

BA-04-000003-03-EN

Scope of application

These Operating instructions only apply to the machine labelled on the cover sheet.

Check the machine model using the machine's rating plate.

Original instructions / translation of the original instructions

In accordance with the EU Machinery Directive, the German copy of these Operating instructions is the original instructions.

Copies in other languages are translations of the original instructions.

Kernlochbohrer GmbH

Geigersbühlweg 52

72663 Großbettlingen

Germany

Phone: +49 (0)70 22 / 50 34 900

E-mail: info@kernlochbohrer.com

Internet: http://www.kernlochbohrer.com

© Kernlochbohrer GmbH

This documentation is protected by copyright.

All rights to this documentation, in particular the right of reproduction, distribution and translation, are reserved by Kernlochbohrer GmbH, even in the case of applications for industrial property rights. No part of this documentation may be reproduced in any form by any means, electronic or mechanical, or processed, duplicated or distributed using electronic systems without the express written permission of Kernlochbohrer GmbH.

Errors and technical changes excepted.

Kernlochbohrer GmbH is not liable for any errors in this documentation. Liability for direct or indirect damages arising in connection with the delivery or use of this documentation is excluded to the extent permitted by law. Furthermore, Kernlochbohrer GmbH cannot be held liable for damages resulting from the infringement of patent and other rights of third parties.

The function of the machine is limited to the functions described in the associated technical documentation.

Table of contents

1 Information and support 6
1.1 Thanks to the buyer 6
1.2 Using the Operating instructions 6
1.3 Changes 6
1.4 Explanation of symbols 7
1.5 Guarantee 7
1.6 Environmental protection 8
1.6.1 Disposal of the product 8
1.6.2 Disposal of the packaging 8
1.7 Service 9
2 Security 10
2.1 General information 10
2.2 Intended use 11
2.3 Safety regulations for the operator 12
2.3.1 Organisational safety measures 12
2.3.2 Changes to the machine 12
2.3.3 Spare parts 13
2.3.4 Personnel 13
2.4 Safety regulations for staff 14
2.4.1 Safe behaviour 14
2.4.2 Safe operation 15
2.4.3 Protective equipment 16
2.5 Safety during maintenance 17
2.5.1 General information 17
2.5.2 Cleaning 17
3 Technical data 18
4 Machine description 19
4.1 Functional description 19
4.2 Machine components and control panel 21
4.3 Scope of delivery 24

5 Utilisation of the machine 25
5.1 Specific precautions 25
5.2 Prepare machine 26
5.2.1 Unpacking the machine 26
5.2.2 Fitting the suction set 26
5.2.3 Prepare the collection container 27
5.3 Working with the machine 30
5.3.1 Visual inspection of the machine 30
5.3.2 Establish electrical connection 31
5.3.3 Switch on the machine 32
5.3.4 Switch off the machine 34
5.3.5 Dust disposal 35
5.4 Transporting and storing the machine 38
6 Maintenance 40
6.1 Notes on proper maintenance 40
6.2 Maintenance and inspection plan 40
6.3 Inspection and maintenance 41
6.3.1 Safety instructions 41
6.3.2 Cleaning the machine 42
6.3.3 Replacing the HEPA filter 44
7 Troubleshooting 46
8 Spare parts 48
9 EU Declaration of Conformity 52

1 Information and support

1.1 Thanks to the buyer

Thank you for purchasing a machine from Kernlochbohrer GmbH.

Please read the Operating instructions carefully and observe the safety instructions. By following the Operating instructions, you will be able to fully utilise the outstanding performance of our product.

If you have any questions regarding the operation of the machine, please contact Kernlochbohrer GmbH directly. We are available to answer your questions at any time.

1.2 Using the Operating instructions

The machine is intended for professional use and may only be operated by trained personnel. Strictly adhere to the instructions in the Operating instructions.

Our company declines all responsibility in the event of non-compliance with the Operating instructions, which may result in injury or damage to the machine.

The Operating instructions are indispensable for using the machine. The Operating instructions must therefore always be kept close to the machine and be accessible to the intended personnel at all times.

In addition to the Operating instructions, the generally applicable and local regulations for accident prevention and environmental protection must be provided; compliance with these regulations must be checked regularly.

1.3 Changes

Kernlochbohrer GmbH reserves the right to change the design and appearance of the products and their Operating instructions. Future changes to the Operating instructions will be made without prior notice.

1.4 Explanation of symbols

⚠ The symbol draws your attention to dangers that you must be aware of when carrying out the following work in order to avoid injury to yourself, other persons or damage to property.

📖 Cross-reference to another point in the Operating instructions.

☑ Prerequisite for an action.

☒ Action to be performed.

↳ Behaviour of the machine that is to be expected as a result of the preceding action.

ⓘ Background information or reference to special features.

1.5 Guarantee

In accordance with Kernlochbohrer GmbH's general terms of delivery, a warranty period of 12 months applies to material defects in business transactions with companies (proof by invoice or delivery note).

Damage caused by natural wear and tear, overloading or improper handling is excluded.

Damage caused by material or manufacturer defects will be rectified free of charge by repair or replacement. Complaints can only be recognised if the device is sent to Kernlochbohrer GmbH undismantled.

Wear parts are excluded from the warranty.

1.6 Environmental protection

1.6.1 Disposal of the product

Follow national regulations on environmentally friendly disposal and recycling of used machines and accessories.

For EU countries only:

Do not dispose of the machine and accessories with household waste! In accordance with European Directive 2012/19/EU on waste electrical and electronic equipment and its transposition into national law, used power tools must be collected separately and recycled in an environmentally friendly manner.

1.6.2 Disposal of the packaging

The packaging is made from recyclable materials. They must be disposed of in accordance with their labelling and municipal guidelines.

ⓘ The machine was transported in a plastic bag.
Keep the plastic bag in order to be able to store the machine in it later.

1.7 Service

Precise information and specific questions allow faults to be rectified quickly, make it easier to order spare parts and prevent incorrect deliveries.

Before contacting the service, please collect the following data first.

The model designation must be stated for all questions and orders:
This information can be found on the rating plate of the machine.

In the event of malfunctions, further information is required:
type and extent of the malfunction, accompanying circumstances, suspected cause.

When ordering spare parts, the following is required:
Quantity and item number in the exploded drawing in these Operating instructions or item number (if known).

ⓘ You are welcome to send us photos when ordering spare parts or videos in the event of faults.

Contact details:

Kernlochbohrer GmbH
Geigersbühlweg 52
72663 Großbettlingen
Germany
Phone: +49 (0)70 22 / 50 34 900
E-mail: info@kernlochbohrer.com
Internet: http://www.kernlochbohrer.com

2 Security

2.1 General information

The machine was built according to the state of the art and in compliance with the applicable laws, standards and safety regulations. Nevertheless, the use of the machine can result in hazards for the user or third parties as well as damage to the machine and other property.

The machine may only be used if it is in perfect working order and in accordance with its intended use, and in a safe and hazard-conscious manner.

If the machine is damaged or malfunctions, switch it off immediately, secure it against being switched on again and repair it or arrange for it to be repaired.

2.2 Intended use

The machine is designed for the extraction and separation of dry, hazardous and non-flammable dust:

The machine fulfils the requirements of DIN EN 60335-2-69, Annex AA, for dust class H with a maximum degree of permeability < 0.005 %.

The machine was developed for cleaning construction or industrial areas and for connection to electrical machines such as drills, grinders, etc.

Do not suck in any combustible or explosive dusts (e.g. magnesium, aluminium, etc.) - risk of explosion!

Do not suck in sparks or hot parts (e.g. metal shavings, ash, etc.) with a temperature above 60 °C - risk of fire and explosion!

Do not suck in any aggressive substances (e.g. acids, alkalis, solvents, etc.).

The machine is only suitable for indoor use.

The machine may only be used within the limits of its technical data. This information, for example performance data and ambient conditions, can be found in the "Technical data" chapter.

Any other use or use beyond this is considered improper use - risk of accident! Kernlochbohrer GmbH is not liable for any resulting damage. The risk is borne solely by the operator.

Intended use also includes observing the operating instructions and complying with the prescribed maintenance intervals.

2.3 Safety regulations for the operator

2.3.1 Organisational safety measures

The Operating instructions must always be available for the operating and maintenance personnel. It must therefore always be kept at the machine's place of use.

The regulations on accident prevention and environmental protection applicable at the machine's place of use must also be available. The operator of the machine must regularly check compliance with these regulations.

The use of sound-emitting machines may be limited in time by national or local regulations.

The machine must not be operated in potentially explosive atmospheres.

All safety and danger notices on the machine must be legible and must not be removed.

The protective equipment required to operate the machine must be provided by the operator. The operator must ensure that the protective equipment is used properly by the personnel.

Operating and auxiliary materials, such as lubricants or cleaning agents, must be selected in such a way that the limit values for hazardous substances applicable at the place of use are complied with. The regulations for environmental protection and disposal applicable at the place of use must be complied with.

2.3.2 Changes to the machine

The operator may not make any modifications to the machine without written authorisation from Kernlochbohrer GmbH. If the operator carries out modifications without authorisation, the warranty becomes void. Kernlochbohrer GmbH is not liable for damage caused by unauthorised modifications.

2.3.3 Spare parts

Spare parts must comply with the properties defined by Kernlochbohrer GmbH. This is always guaranteed for spare parts supplied by Kernlochbohrer GmbH. Kernlochbohrer GmbH is not liable for damage caused by the use of unsuitable spare parts.

2.3.4 Personnel

All persons who are authorised to commission, operate and maintain the machine must have read and understood the Operating instructions beforehand.

The machine may only be operated by persons who have been adequately instructed beforehand.

The machine may only be serviced by persons who have completed the appropriate specialised training for this activity.

Minors are not permitted to work with the machine. Young people over the age of 16 who are trained under supervision are exempt from this regulation.

2.4 Safety regulations for staff

2.4.1 Safe behaviour

All persons responsible for commissioning, operating and maintaining the machine must have read and understood the Operating instructions beforehand.

The machine may only be operated by persons who have been adequately instructed beforehand.

The machine may only be serviced by persons who have completed the appropriate specialised training for this activity.

Minors are not permitted to work with the machine. Young people over the age of 16 who are trained under supervision are exempt from this regulation.

Any work on and with the machine that could jeopardise safety must be avoided.

All safety and danger notices on the machine must be legible and must not be removed.

2.4.2 Safe operation

Operating the machine requires the full concentration and ability of the personnel. Persons who are overtired, unable to concentrate or under the influence of alcohol, drugs or medication must not work on or with the machine.

Persons who are not directly required to operate the machine must maintain a sufficient safety distance from the machine.

Before using the machine, check that it is in perfect condition.

If the machine is damaged, it must not be used. Secure the machine against use and repair it or arrange for it to be repaired.

In order not to jeopardise the functionality and safety of the machine, covers or other components of the machine must not be removed.

Before starting or starting up the machine, ensure that persons are not endangered by the starting machine.

Operating elements must not be operated thoughtlessly or wilfully. This could result in personal injury or damage to the machine.

When using the machine, personnel must ensure that they stand securely and adopt an ergonomic posture.

The machine must not be left unattended during use.

Air inlet and outlet openings must not be covered during use.

Never immerse the machine in water.

The machine must be cleaned regularly so that dirt does not accumulate. All operating elements and handles must be kept clean, dry and free of grease.

When the machine is not in use, it must be parked in such a way that nobody is endangered. Secure the machine against unauthorised use.

2.4.3 Protective equipment

If the noise emissions generated when using the machine exceed the limit values applicable to this workplace, suitable hearing protection must be worn.

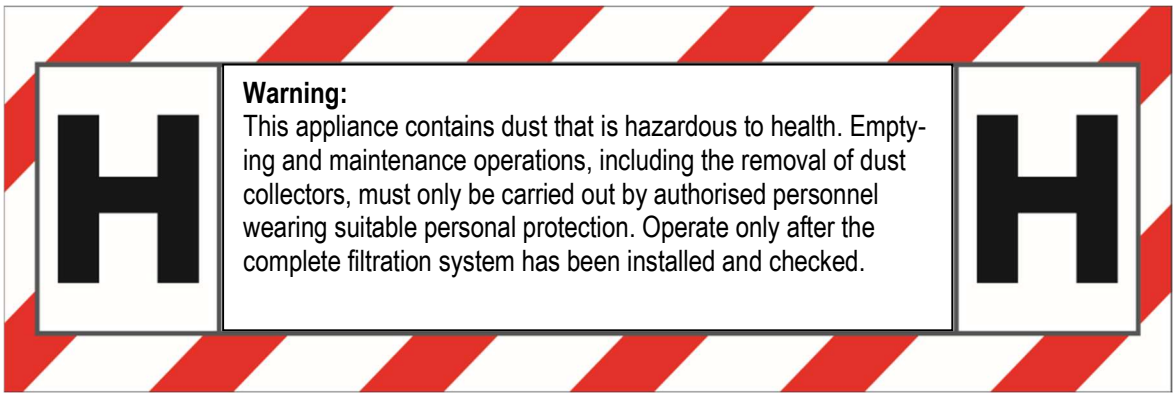

When disposing of dust, changing filters and cleaning the machine, there is a risk of harmful dust! Personnel must therefore wear suitable protective equipment during these activities:

- Safety goggles
- Protective gloves
- FFP3 protection class breathing mask
- Disposable clothing

Persons carrying out maintenance work on the machine are obliged to wear additional, suitable protective equipment that is required for this work.

2.5 Safety during maintenance

2.5.1 General information

The machine may only be serviced by persons who have completed the appropriate specialised training for this activity.

The maintenance activities and intervals specified in the Operating instructions must be observed.

Workshop equipment appropriate to the type of work is required to carry out maintenance activities.

The following safety precautions must be taken before starting maintenance work:

- Position the machine so that the access point is easily accessible.
- Set the machine to the appropriate operating status.

After completion of maintenance activities:

- Assemble the machine completely.
- If operating elements or safety devices have been removed, they must be refitted and their function checked.
- Retighten any screw connections that have been loosened. Re-attach the screw locks.

2.5.2 Cleaning

Do not use any corrosive, harmful or environmentally damaging substances to clean the machine. Dispose of cleaning agents in an environmentally friendly manner.

Under no circumstances should high-pressure cleaners, water jets or compressed air be used to clean the machine.

3 Technical data

Article number	6442
Maximum air flow	262 m³/h
Maximum negative pressure	250 mbar
Suction hose connection	Ø 35 mm
Suction hose	Ø35 x 4000 mm
Dust class according to DIN EN 60335-2-69, Annex AA (at maximum transmission rate < 0.005%)	H
HEPA filter according to EN 1822 - H13	Separation efficiency 99.95 % @ 0.3 µm
Collection container volume	38 litres
Width	385 mm
Depth	500 mm
Height	570 mm
Weight	13.5 kg
Supply voltage	230 V ±5%
Frequency	50
Performance	1200 W
Power consumption	5,2 A
Mains cable	H05VV-F 3*1.5 | Length 6 m
Mains plug	Type F (CEE 7/4)
Ambient temperature	max. +40 °C
Relative humidity	max. 85 %
Sound power level L_{weq}	approx. 75 dB(A)

4 Machine description

4.1 Functional description

The TS38/HEPA dry vacuum cleaner is a powerful and versatile cleaning appliance that is suitable for dry, non-flammable dust and. With a maximum power of 1200 W, a maximum air flow of 262 m³/h and a negative pressure of up to 250 mbar, it is a reliable cleaning solution for various applications.

The TS38/HEPA has an advanced filter system consisting of two HEPA filters that offer a filter efficiency of more than 99.95% for particles of 0.3 µm in size. The dry vacuum cleaner also has a self-cleaning function for the filters, which ensures a long service life and consistently high suction power.

A special feature of the TS38/HEPA dry vacuum cleaner is the adjustable air flow. The air flow regulator can be used to regulate the suction power according to requirements and surface properties in order to achieve optimum cleaning results.

The TS38/HEPA also has a practical socket for connecting power tools. This socket makes it possible to connect power tools with a maximum output of 1200 W directly to the vacuum cleaner. This integrated function makes working with power tools even more efficient, as the dry vacuum cleaner starts automatically as soon as the connected power tool is switched on.

With a generous capacity of 38 litres, the TS38/HEPA dry vacuum cleaner enables longer cleaning jobs without having to empty the container frequently.

With its compact dimensions of 385 x 500 x 570 mm and a weight of 13.5 kg, the TS38/HEPA is easy to transport and simple to handle.

Filter function for vacuuming

After starting, the dust-laden air is sucked into the interior of the dry vacuum cleaner via the suction set.

The air flows into the collection container and through the dust bag (if present). Coarse dust particles are already separated and collected in the dust bag.

The air then flows through the two HEPA filters, on the outside of which the finer dust particles are separated. This filters the intake air to a high level of purity.

Automatic cleaning of the HEPA filters

During operation of the dry vacuum cleaner, both HEPA filters are cleaned automatically and alternately.

The diagrams below show a cleaning cycle:

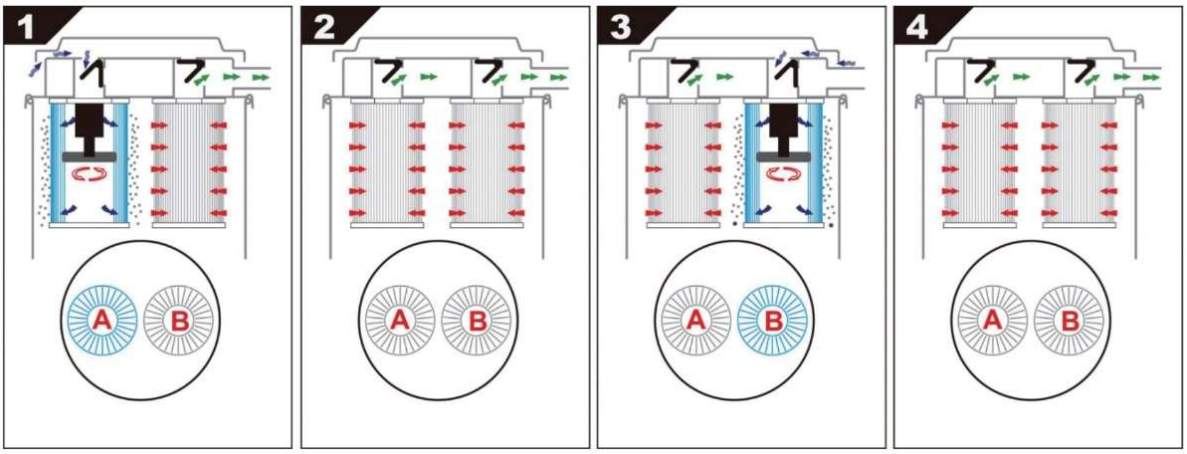

1 Filter A is cleaned mechanically; particles adhering to the outside fall down into the collection container. Filter B cleans the incoming air. This cycle takes approximately 3 seconds.

2 Filter A and filter B in operation together for about 15 seconds.

3 Filter B is cleaned mechanically. Filter A cleans the incoming air. This cycle also takes about 3 seconds.

4 Filter A and filter B in operation together for about 15 seconds.

The cleaning cycle then starts all over again.

4.2 Machine components and control panel

Machine components

1 Upper part

2 Quick release (2 pieces)

3 Collecting container

4 Wheel (2 pieces)

5 Control panel (see separate illustration for details)

6 Suction hose connection (closed with protective cap)

7 Swivel castor with parking brake (2 pieces)

📖 For further machine components see Scope of delivery in chapter 4.3.

Control panel

1	Filter clogging indicator
2	Air flow controller
3	On/off switch
4	Operating mode switch
5	Socket for connecting power tools

Switching positions of the operating mode switch:

AUTO	Dry vacuum cleaner starts after the power tool connected to the socket has started up. After switching off the power tool, the dry vacuum cleaner stops with a delay of 7 seconds to completely empty the suction set.
0	Dry vacuum cleaner switched off.
ON	Dry vacuum cleaner runs in continuous operation

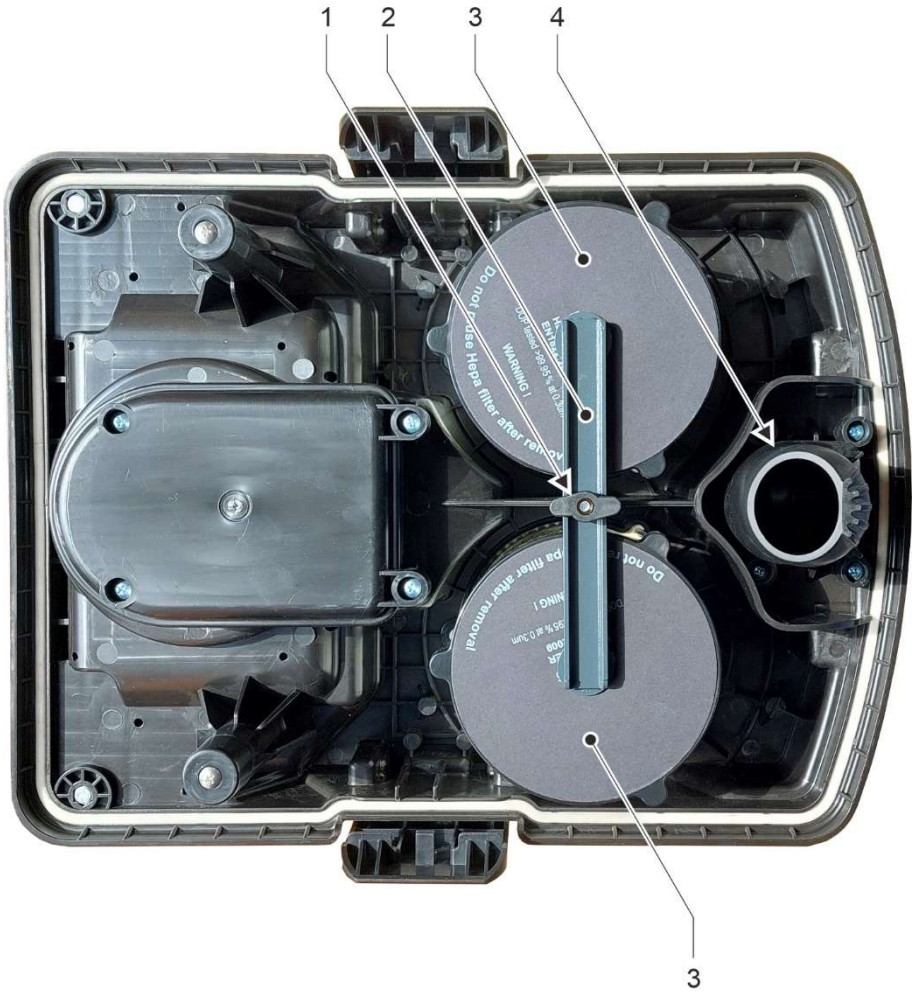

Underside of the upper part

1 Wing nut

2 Retaining bracket

3 HEPA filter (2 pieces)

4 Dirt discharge pipe

4.3 Scope of delivery

The scope of delivery includes the following components:

Pos.	Designation	Quantity
1	Straight suction pipe	2
2	Floor brush	1
3	Suction hose (antistatic)	1
4	Curved suction pipe	1
5	Dry vacuum cleaner	1

Not shown in illustration:

Designation	Quantity
Reducer	1
Crevice nozzle	1
Dust bag	1

5 Utilisation of the machine

ⓘ In these Operating instructions, the term vacuum cleaner is sometimes used for the dry vacuum cleaner TS38/HEPA to simplify matters.

5.1 Specific precautions

Only operate the vacuum cleaner when the complete filter system is installed.

The vacuum cleaner may only be operated in a room with sufficient room volume or sufficient ventilation:

- In order to comply with the required limit values, the air flow Q_Z returned by the extractor must not exceed 50% of the fresh air volume V_F : $Q_Z = 0.5 * V_F$
- The fresh air volume V_F is calculated as the product of the room volume V_R and the air exchange rate L_W : $V_F = V_R * L_W$
- Without special ventilation measures, an air exchange rate of $L_W = 1 / h$ applies.
- For the TS38/HEPA vacuum cleaner, this would result in a minimum room volume of 524 m³.
- Additional ventilation measures must be taken for smaller rooms.

Other national and regional health and safety regulations must be observed.

The vacuum cleaner does not have the appropriate protection class and must therefore not be operated in wet rooms (e.g. bathrooms or laundry rooms).

People or animals must not be vacuumed with the vacuum cleaner.

After use, the vacuum cleaner contains dust that is hazardous to health. Emptying and maintenance work, including the removal of dust collection materials, may only be carried out by authorised personnel wearing suitable personal protection.

5.2 Prepare machine

5.2.1 Unpacking the machine

When unpacking the vacuum cleaner, check that all accessories are present.

📖 See chapter 4.3 "Scope of delivery".

ⓘ If the scope of delivery is not complete, please contact Kernlochbohrer GmbH.

5.2.2 Fitting the suction set

The suction hose can be supplemented with the supplied accessories depending on the cleaning task:

- Curved suction pipe
- Straight suction pipes (2 pieces)
- Floor brush
- Reducer
- Crevice nozzle

5.2.3 Prepare the collection container

If the vacuum cleaner has already been used for vacuuming:

Harmful dust can escape when cleaning and maintaining the vacuum cleaner!

Wear safety goggles, protective gloves, disposable protective clothing and a respiratory mask of protection class FFP3!

The collection container must be fitted with a dust bag.

Procedure:

☑ Suction cup unpacked.

📖 See chapter 5.2.1 "Unpacking the machine".

☑ Mains plug not plugged into socket.

☑ Vacuum cleaner switched off at the on/off switch.

☒ Apply the parking brake on both swivel castors to prevent the vacuum cleaner from rolling away.

☒ Open both quick-release levers of the upper section.

☒ Remove the top.

☒ Insert the dust bag into the collection container so that the two holes in the plate of the dust bag are positioned on the pins in the collection container.

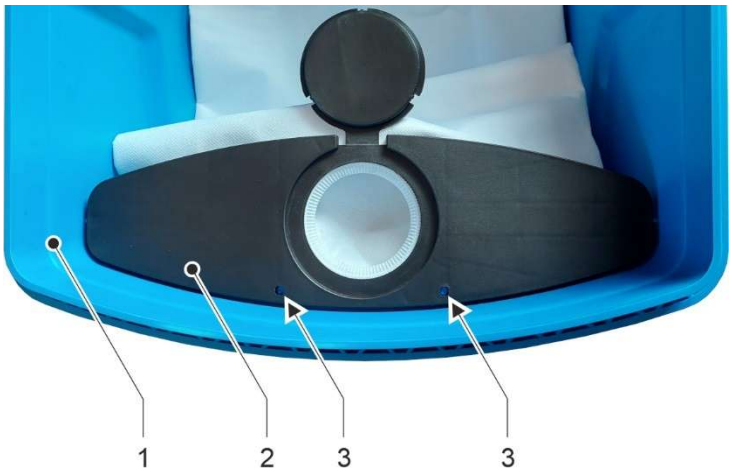

Inserting the dust bag into the collection container

1 Collecting container
2 Plate of the dust bag
3 Pins of the collection container in holes of the dust bag

☒ Place the upper part on the collection container. Make sure that the dirt discharge pipe of the upper part is immersed in the opening of the dust bag.

☒ Fasten the upper section with the two quick-release levers.

Alternatively, the vacuum cleaner can also be used for vacuuming without a dust bag. The vacuumed dirt is then deposited directly in the collection container.

ⓘ Kernlochbohrer GmbH always recommends using a dust bag when vacuuming, as this makes dust disposal safer and easier and facilitates cleaning of the collection container.

Connect the power tool to the machine:

If a power tool is to be connected to the vacuum cleaner, it must fulfil the following conditions:

- Maximum power consumption 1200 W / voltage 230 V / frequency 50 Hz
- Mains cable with mains plug type F (CEE 7/4)
- Fault-free and regularly tested by a qualified electrician in accordance with EN 60204-1.

Procedure:

☑ Vacuum cleaner power plug not plugged into socket.

☑ Vacuum cleaner switched off at the on/off switch.

☑ Power tool switched off.

☒ Apply the parking brake on both swivel castors to prevent the vacuum cleaner from rolling away.

☒ Plug the power cable of the power tool into the socket of the vacuum cleaner.

5.3 Working with the machine

5.3.1 Visual inspection of the machine

Before working with the dry vacuum cleaner, it must be visually inspected:

- Check the general condition and cleanliness of the vacuum cleaner.
- Check that all covers and components of the vacuum cleaner are present.
- Check that all screws are tight.
- Air inlet and outlet openings must not be dirty or covered.
- Filter system fully installed and checked for function.

5.3.2 Establish electrical connection

Please note the following points:

- Observe the electrical connection values of the vacuum cleaner.

  📖 See chapter 3 "Technical data".
- The mains cable and mains plug must not be damaged.
- Damaged mains cable or damaged mains plug may only be replaced by Kernlochbohrer GmbH or a qualified electrician.
- The vacuum cleaner is equipped with a type F mains plug (CEE 7/4). The vacuum cleaner may only be operated from a socket outlet with earthing contact (CEE 7/3) that is appropriately earthed.
- When connecting the vacuum cleaner to the mains, a residual current circuit breaker with a maximum tripping current of 30 mA must be connected upstream.
- The vacuum cleaner may only be connected to a socket outlet that is protected by a circuit breaker or a fuse with a minimum current rating of 16 A.
- Never touch the mains plug with wet hands.
- The mains plug and socket must be clean and dust-free.
- The supplied electrical voltage must not deviate by more than 5% from the nominal value. Excessive voltages can lead to irreparable damage to the vacuum cleaner.
- Voltage peaks must not occur when operating the vacuum cleaner with power generators.
- When using extension cables, the cable cross-section must be suitable for the power consumption of the vacuum cleaner.
- When using a cable reel, the cable must always be unrolled completely.
- Grasp the mains plug to remove the mains cable from the socket. Do not pull on the cable.
- If the vacuum cleaner is not to be used for a longer period of time, switch off the vacuum cleaner and remove the mains plug from the socket.

5.3.3 Switch on the machine

Procedure:

☑ Suction cup prepared.

🕮 See chapter 5.2 "Prepare machine".

☑ Visual inspection of the suction cup carried out.

🕮 See chapter 5.3.1 "Visual inspection of the machine".

☑ Electrical connection established.

🕮 See chapter 5.3.2 "Establish electrical connection".

☒ Apply the parking brake on both swivel castors to prevent the vacuum cleaner from rolling away.

☒ Attach the suction set to the suction hose connection of the vacuum cleaner.

☒ Preselect the operating mode of the vacuum cleaner at the operating mode switch:

AUTO Vacuum cleaner starts after the power tool connected to the socket starts up.

ON Vacuum cleaner runs in continuous operation.

☒ Switch on the vacuum cleaner using the on/off switch.

ⓘ The on/off switch has two positions:
Position 0: Suction cup switched off
Position 1: Suction cup switched on

ⓘ If the operating mode switch is in the AUTO position, the vacuum cleaner motor will not start until the power tool connected to the socket has started.

↳ Once the motor has fully run up, the vacuum cleaner has reached full power and the suction process can begin.

ⓘ The air flow regulator on the control panel can be used to regulate the suction power according to requirements and surface conditions in order to achieve optimum cleaning results.

ⓘ The suction power can also be adjusted by turning the air flow adjustment ring on the suction hose.

ⓘ When using the vacuum cleaner, the suction hose must not be kinked, rolled or twisted!

☒ Continuously check the filter clogging indicator on the control panel during the suction process.

If the filter contamination indicator lights up, the HEPA filters must be replaced.

🕮 See chapter 6.3.3 "Replacing the HEPA filter".

☒ Continuously check the fill level in the dust bag or collection container during the suction process.

🕮 See chapter 5.3.5 "Dust disposal".

If the dust bag or collection container is full, replace the dust bag or empty the collection container.

☒ In rare cases, the filters may become blocked.

In this case, carry out a deep cleaning of the filters:

☒ Switch on the vacuum cleaner.

☒ Close the opening of the suction set by hand for about 60 seconds.

If the suction performance is still poor after this, the HEPA filters must be replaced.

🕮 See chapter 6.3.3 "Replacing the HEPA filter".

5.3.4 Switch off the machine

Before removing the vacuum cleaner and the accessories used from the contaminated area, the exterior of the vacuum cleaner and the accessories must be cleaned.

📖 See chapter 6.3.2 "Cleaning the machine".

Alternatively, suction cups and accessories can be packed in air-tight film bags for transport or temporary storage.

People may come into contact with harmful substances when emptying, cleaning and maintaining the vacuum cleaner!

Wear suitable protective equipment (safety goggles, protective gloves, disposable protective clothing and FFP3 respiratory mask) depending on the material vacuumed up!

Procedure:

- ☒ Switch off the vacuum cleaner using the on/off switch.
- ☒ Remove the mains plug from the socket.
- ☒ Remove the suction hose from the suction hose connection.
- ☒ Close the suction hose connection with the protective cap.
- ☒ Clean dirty suction set and accessories or pack them in an airtight plastic bag.
- ☒ Clean the outside of the teat or pack the teat in an airtight foil bag.
- ☒ Wind up the mains cable and tie it together.

5.3.5 Dust disposal

Harmful dust can escape when cleaning and maintaining the vacuum cleaner!

Wear safety goggles, protective gloves, disposable protective clothing and a respiratory mask of protection class FFP3!

Spare part (when using a dust bag):

Dust bag - article number 6443

Procedure when using a dust bag:

- ☒ Switch off the vacuum cleaner motor using the on/off switch.
- ☒ Remove the mains plug from the socket.
- ☒ Apply the parking brake on both swivel castors to prevent the vacuum cleaner from rolling away.
- ☒ Open both quick-release levers of the upper section.
- ☒ Remove the top.
- ☒ Insert the sealing cap of the dust bag into the opening of the dust bag.

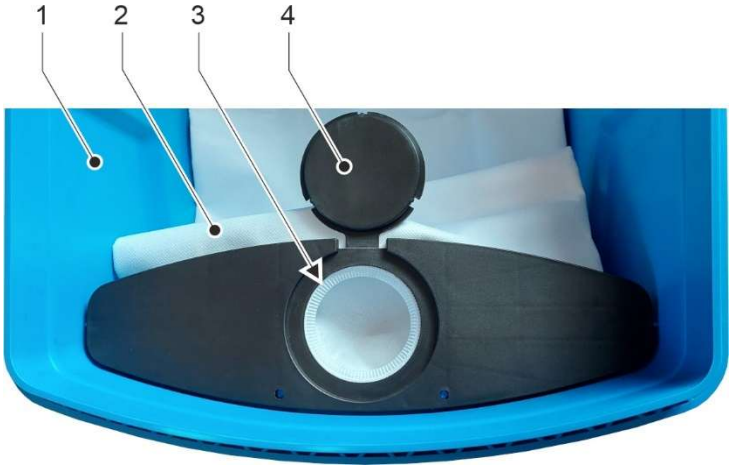

Removing the full dust bag from the collection container

1 Collecting container
2 Dust bag
3 Opening in the plate of the dust bag
4 Dust bag sealing cap

- ☒ Remove the dust bag from the collection container.
- ☒ Dispose of the dust bag in an environmentally friendly manner according to the material vacuumed up and in compliance with the applicable regional laws and guidelines.
- ☒ Empty the collection container and dispose of the vacuumed material in an environmentally friendly manner.
- ☒ Clean the collection container. Dispose of residual material and cleaning agents in an environmentally friendly manner.
- ☒ Insert the new dust bag into the collection container so that the two holes in the plate of the dust bag are positioned on the pins in the collection container.

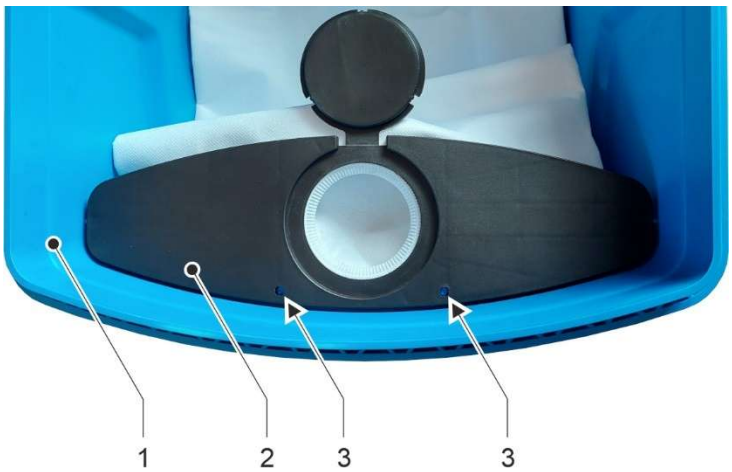

Inserting the dust bag into the collection container

1 Collecting container
2 Plate of the dust bag
3 Pins of the collection container in holes of the dust bag

- ☒ Place the upper part on the collection container. Make sure that the dirt discharge pipe of the upper part is immersed in the opening of the dust bag.
- ☒ Fasten the upper section with the two quick-release levers.

Procedure without using a dust bag:

- ☒ Switch off the vacuum cleaner motor using the on/off switch.
- ☒ Remove the mains plug from the socket.
- ☒ Apply the parking brake on both swivel castors to prevent the vacuum cleaner from rolling away.
- ☒ Open both quick-release levers of the upper section.
- ☒ Remove the top.
- ☒ Empty the collection container and dispose of the absorbed material in an environmentally friendly manner in compliance with the applicable regional laws and guidelines.
- ☒ Clean the collection container. Dispose of residual material and cleaning agents in an environmentally friendly manner.
- ☒ Place the upper part on the collection container.
- ☒ Fasten the upper section with the two quick-release levers.

5.4 Transporting and storing the machine

Before removing the vacuum cleaner and the accessories used from the contaminated area, the exterior of the vacuum cleaner and the accessories must be cleaned.

📖 See chapter 6.3.2 "Cleaning the machine".

Alternatively, suction cups and accessories can be packed in air-tight film bags for transport or temporary storage.

People may come into contact with harmful substances when transporting the vacuum cleaner!

Wear suitable protective equipment (safety goggles, protective gloves, disposable protective clothing and FFP3 respiratory mask) depending on the material vacuumed up!

Procedure:

☒ Switch off the vacuum cleaner.

📖 See chapter 5.3.4 "Switch off the machine".

☒ Empty the collection container.

📖 See chapter 5.3.5 "Dust disposal".

☒ Clean the suction cup.

📖 See chapter 6.3.2 "Cleaning the machine".

☒ The individual parts of the suction set can be attached to the machine:

1 Curved suction pipe
2 Crevice nozzle
3 Reducer
4 Straight suction pipe (2 pieces)
5 Rubber cord (2 pieces)
6 Suction hose
7 Swivelling holder for suction hose (2 pieces)
8 Floor brush

☒ Release the parking brake on both swivel castors.

☒ Transport the vacuum cleaner as vertically as possible. To do this, push the vacuum cleaner on castors and wheels.

☒ To transport the vacuum cleaner over obstacles such as steps or stairs: Lift the vacuum cleaner by the carrying handle on the top.

☒ After transport:
- Switch off the vacuum cleaner and secure it against falling over.
- Apply the parking brake on both swivel castors to prevent the vacuum cleaner from rolling away.

☒ Store the suction cup in a dry, cool place protected from moisture and direct sunlight.

☒ Secure the vacuum cleaner against unauthorised use.

6 Maintenance

6.1 Notes on proper maintenance

Insufficient or improper maintenance can cause malfunctions and impair the operational safety and service life of the machine. Regular inspection and maintenance is therefore essential. We recommend that maintenance work is only carried out by trained personnel.

The contractually agreed warranty does not release the operator of the machine from the obligation to maintain the machine in accordance with the manufacturer's instructions from the time of commissioning. Kernlochbohrer GmbH is not liable for damage caused by a lack of maintenance.

6.2 Maintenance and inspection plan

The interval specifications refer to normal operating conditions. In more difficult conditions (heavy dust accumulation, etc.) and longer daily working times, the specified intervals must be shortened accordingly by the operator.

Only use the maintenance and inspection schedule as a guide! Be sure to observe the cross-references to chapter 6.3! This contains a detailed description of how to carry out the individual tasks correctly and safely.

Interval	Category	Component	Activity	Chapter
1 week	Real time	Machine	Cleaning	6.3.2
After display		HEPA filter	Replace	6.3.3

6.3 Inspection and maintenance

6.3.1 Safety instructions

Cleaning and maintenance of the dry vacuum cleaner may only be carried out by trained personnel!

People may come into contact with harmful substances when emptying, cleaning and maintaining the vacuum cleaner!

Wear suitable protective equipment (safety goggles, protective gloves, disposable protective clothing and FFP3 respiratory mask) depending on the material vacuumed up!

Suitable precautions must be taken before cleaning or maintaining the vacuum cleaner:

- Vacuum cleaners and accessories must be considered contaminated if they are removed from the hazardous area.
- Suitable measures must be taken to avoid dust dispersion.
- Full protective equipment for personnel.
- Before dismantling: Clean the outside of the vacuum cleaner by vacuuming or wiping.
- Filtered forced ventilation at the workplace.
- Final cleaning of the workplace.

6.3.2 Cleaning the machine

Do not use sharp sponges or metal objects to clean the vacuum cleaner. These could damage the surface of the suction cup.

Do not use high-pressure cleaners, water jets or compressed air to clean the vacuum cleaner. The sharp water or air jet could damage the vacuum cleaner.

Do not use any corrosive, harmful or environmentally damaging substances to clean the vacuum cleaner.

Safety instructions in chapter 6.3.1 must be observed!

Interval:

1 week real time

Auxiliary means:

- The cleaning agent should be placed in a container with a mixture of water and mild detergent (e.g. washing-up liquid).
- Cloth and brush

Procedure:

☑ Switch off the vacuum cleaner and remove the mains plug from the socket.
🕮 See chapter 5.3.4 "Switch off the machine".

☑ Collection container emptied.
🕮 See chapter 5.3.5 "Dust disposal".

☒ Apply the parking brake on both swivel castors to prevent the vacuum cleaner from rolling away.

- ☒ Clean dust and dirt from the vacuum cleaner.
  - Use a damp cloth dipped in water mixed with a mild detergent.
  - No water may enter the interior of the housing via the ventilation openings.
- ☒ Open both quick-release levers of the upper section.
- ☒ Remove the top section, place it with the underside facing upwards and secure it against tipping over.
- ☒ Clean the collection container in an environmentally friendly manner according to the material sucked up and in compliance with the locally applicable laws and guidelines.
- ☒ Clean the air inlet and outlet openings with a brush and damp cloth.
- ☒ Clean all accessories, such as suction hose, floor brush, etc.
- ☒ Check that all screws on the suction cup are tight. If necessary, tighten the screws.
- ☒ Allow the suction cup and accessories to dry completely.
- ☒ Place the upper part on the collection container.
- ☒ Fasten the upper section with the two quick-release levers.
- ☒ Check the mains plug and mains cable for damage. Have damaged parts replaced by a qualified electrician.
- ☒ Check the presence and legibility of the warning sign:

If the warning sign is missing or illegible: Replace the warning sign.

6.3.3 Replacing the HEPA filter

Harmful dust can escape when cleaning and maintaining the vacuum cleaner!

Wear safety goggles, protective gloves, disposable protective clothing and a respiratory mask of protection class FFP3!

Further safety instructions in chapter 6.3.1 must be observed!

Spare part:

HEPA filter - article number 6444 (2 pieces required)

Auxiliary means:

- The cleaning agent should be placed in a container with a mixture of water and mild detergent (e.g. washing-up liquid).
- Cloth and brush
- Cable ties or adhesive tape to seal the plastic bags.

Procedure:

☑ Switch off the vacuum cleaner and remove the mains plug from the socket.
🕮 See chapter 5.3.4 "Switch off the machine".

☑ Collection container emptied.
🕮 See chapter 5.3.5 "Dust disposal".

☒ Apply the parking brake on both swivel castors to prevent the vacuum cleaner from rolling away.

☒ Clean dust and dirt from the vacuum cleaner.
- Use a damp cloth dipped in water mixed with a mild detergent.
- No water may enter the interior of the housing via the ventilation openings.

- ☒ Open both quick-release levers of the upper section.
- ☒ Remove the top section, place it with the underside facing upwards and secure it against tipping over.
- ☒ Open the plastic bags of the new HEPA filters at the edge so that they can be used to dispose of the old filters.
- ☒ Remove the new HEPA filters from the plastic bag and have them ready.
- ☒ Remove the wing nut and retaining bracket of the HEPA filter.
- ☒ Remove the dirty HEPA filter and place it in the empty plastic bag. Seal the plastic bag tightly with cable ties or adhesive tape.

  ⓘ Dispose of the HEPA filter in an environmentally friendly manner according to the material vacuumed up and in compliance with the applicable regional laws and guidelines.

  ⓘ HEPA filters can be cleaned with water.

  Do not use a high-pressure water jet or compressed air. This could destroy the filter.

  Then dry the HEPA filter thoroughly.

  Dispose of cleaning agents in an environmentally friendly manner in accordance with the material absorbed and in compliance with the applicable regional laws and guidelines.
- ☒ Insert new or cleaned HEPA filters into the upper part.
- ☒ Attach the retaining bracket with the wing nut.
- ☒ Place the upper part on the collection container.
- ☒ Fasten the upper section with the two quick-release levers.

7 Troubleshooting

If a fault occurs during operation of the machine, please first try to rectify the fault yourself using the following information.

If you are unable to rectify the fault yourself, please contact Kernlochbohrer GmbH.

Malfunction	Possible cause	Troubleshooting
Vacuum cleaner does not start	No power supply	Plug in the mains plug or check the socket.
	Fuse blown on circuit board	Have the fuse replaced by a qualified electrician.
	Suction motor without function, but filter cleaning motor is running	Suction motor defective. Have the suction motor replaced by a qualified electrician.
	Suction motor and filter cleaning motor without function	Circuit board defective. Have the circuit board replaced by a qualified electrician.
Vacuum cleaner runs, but poor suction power	Air flow controller set to minimum power.	Turn the air flow regulator clockwise to increase the suction power.
	Dust bag full	Replacing the dust bag
	HEPA filter dirty	Empty and clean the collection container. If a dust bag is not used, the HEPA filters can quickly become dirty due to dust turbulence.
	HEPA filter dirty	Carry out a deep clean of the filters. If necessary, remove the HEPA filter and knock it out or clean it with water.

Malfunction	Possible cause	Troubleshooting
Vacuum cleaner blows out dust	HEPA filter damaged.	Install new HEPA filters.
	HEPA filter installed incorrectly.	Install the HEPA filter correctly.
Motor makes abnormal noises	Motor defective	Please contact Kernlochbohrer GmbH

8 Spare parts

Upper part

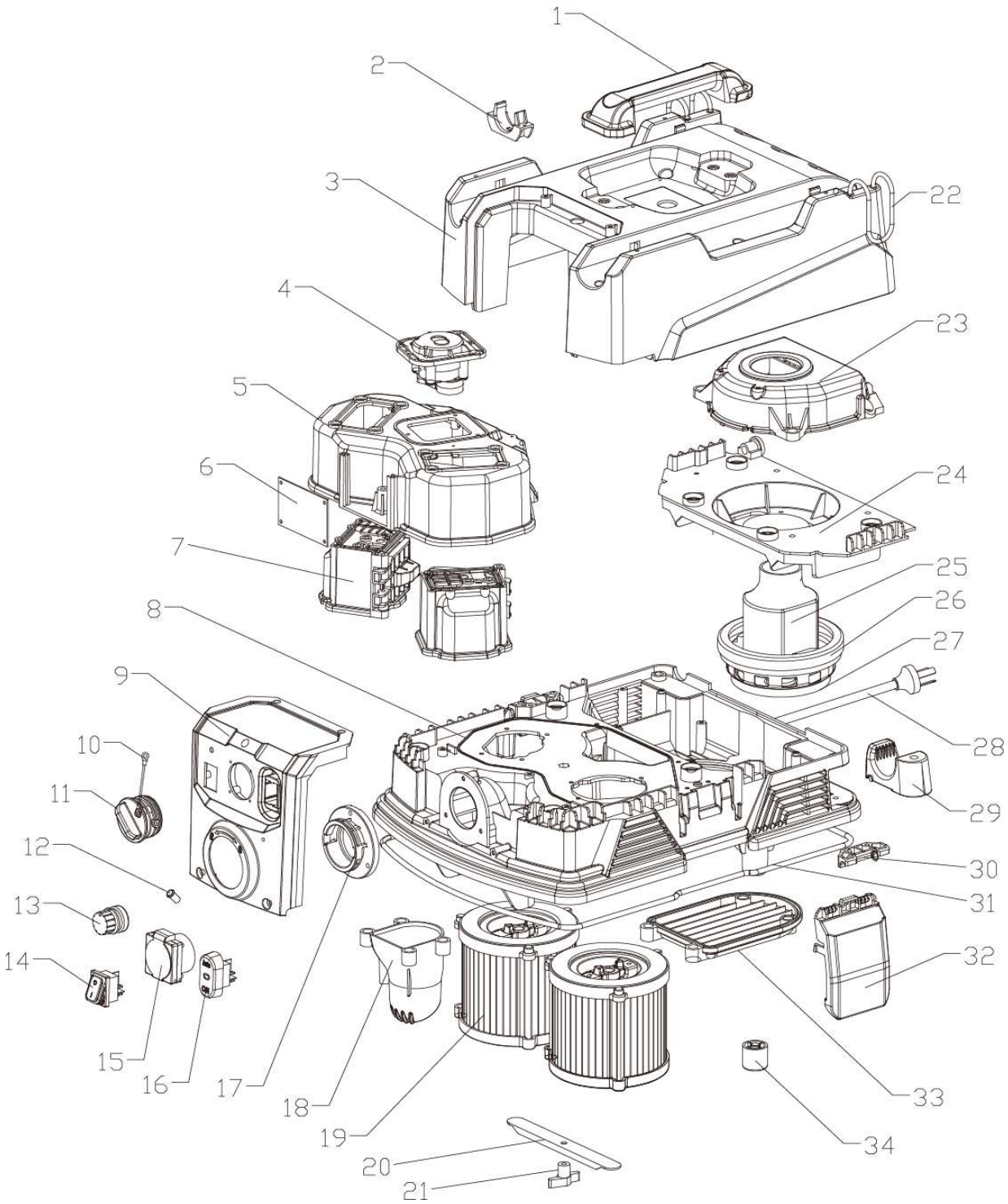

No.	Designation	Qty.	Specification
1	Carrying handle	1	
2	Hose clamp	4	
3	Top cover	1	
4	Drive module B0042	1	
5	Air bonnet	1	
6	Printed circuit board of the control module	1	
7	Changeover valve assembly B0047	2	
8	Centralised coverage	1	
9	Control panel	1	
10	Retaining strap of the protective cap	1	
11	Protective cap	1	
12	Vacuum indicator	1	
13	Air flow controller	1	
14	On/off switch	1	
15	Output socket (10 A)	1	
16	Operating mode switch	1	
17	Flange connection	1	
18	Air inlet for dust bag	1	
19	HEPA filter	2	
20	Filter holder	1	
21	Wing nut	1	M6
22	Elasticated cord	2	Ø 4 mm | 0.5 m
23	Motor cover	1	
24	Motor mount	1	
25	Single-phase bypass motor	1	1200 W | 230 V
26	Engine damping ring	1	
27	Engine damping ring 118	1	
28	Mains cable with 230V plug	1	3x 1.5 mm² | 8 m
29	Hose holder	2	
30	Buckle holder	2	
31	Sealing ring	1	Ø 4 mm | 1.6 m
32	Buckle	2	
33	Cover plate	1	
34	Foot pad	2	

Lower part

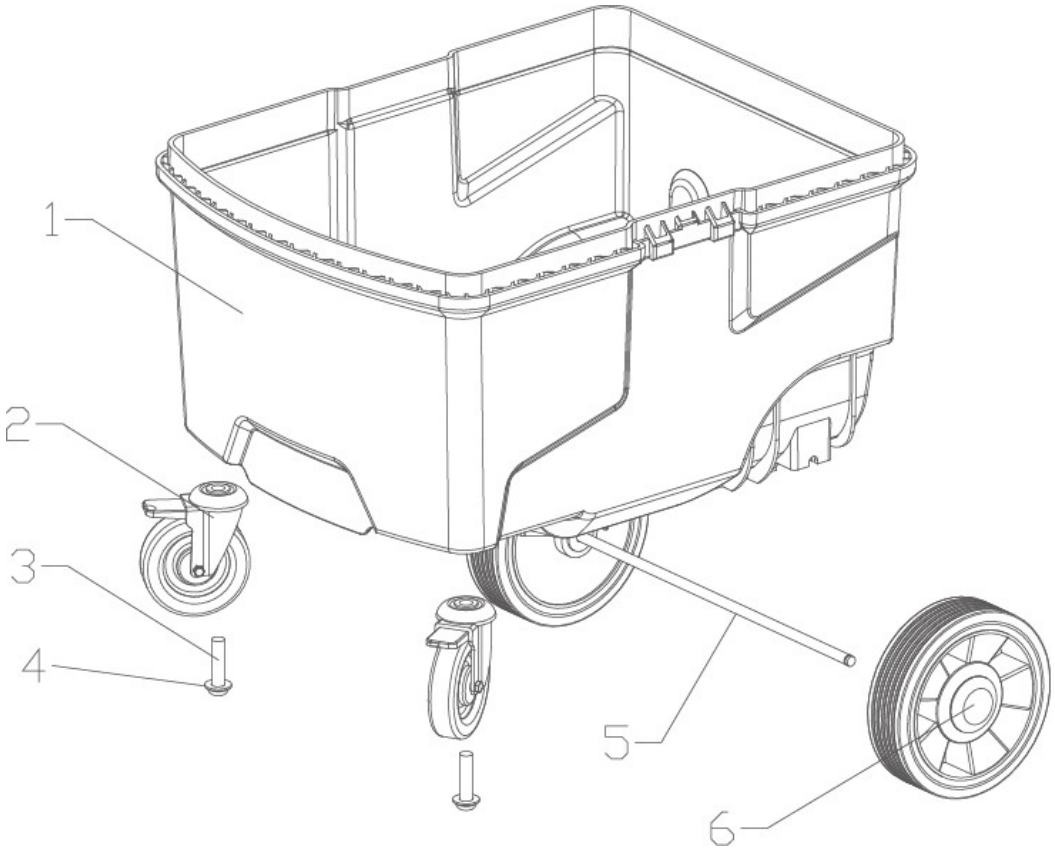

No.	Designation	Quantity	Specification
1	Collecting container	1	
2	Swivel castor with parking brake	2	
3	Hexagon socket screw	2	M10 x 40
4	Spring washer	2	M10
5	Axis	1	
6	Wheel	2	

Accessories

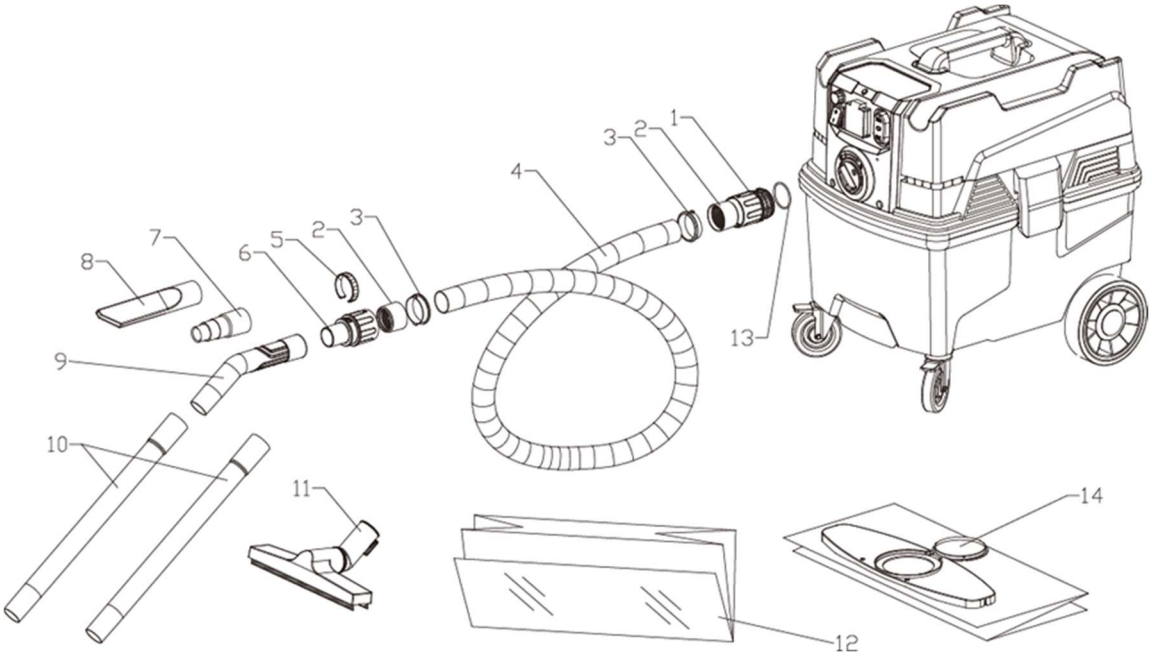

No.	Designation	Quantity	Specification
1	Vacuum side hose sleeve	1 piece	
2	Threaded clamping head	2 pieces	
3	Bayonet coupling	2 pieces	
4	Antistatic hose	4 metres	
5	Air flow adjustment ring	1 piece	
6	Hose cuff grip side	1 piece	
7	Reducer	1 piece	
8	Crevice nozzle	1 piece	
9	Curved suction pipe	1 piece	
10	Straight suction pipe	2 pieces	D35 x 450
11	Floor brush	1 piece	L = 300
12	Not available		
13	O-ring	1 piece	48 x 3,5
14	Dust bag	1 piece	

9 EU Declaration of Conformity

The manufacturer/distributor

Kernlochbohrer GmbH
Geigergsbühlweg 52
72663 Großbettlingen
Germany

hereby declares that the following product

Product description:	**Dry vacuum cleaners**
Type:	**TS38/HEPA**

complies with all relevant provisions of the applicable legal regulations (hereinafter) - including their amendments valid at the time of the declaration. This declaration of conformity is issued under the sole responsibility of the manufacturer. This declaration relates only to the machine in the state in which it was placed on the market; parts and/or modifications subsequently fitted by the end user are not taken into account.

The following legal provisions were applied:

Machinery Directive 2006/42/EU (for deliveries until 19 January 2027) or Machinery Regulation 2023/1230 (for deliveries from 20 January 2027)

Electromagnetic Compatibility Directive 2014/30/EU

The following harmonised standards were applied:

EN ISO 12100	Safety of machinery - General principles for design - Risk assessment and risk reduction (ISO 12100:2010)
EN 60335-1:2012/A15:2021	Safety of household and similar electrical appliances - Part 1: General requirements
EN 60355-2-69:2016	Household and similar electrical appliances - Safety - Part 2-69: Particular requirements for commercial vacuum cleaners and water vacuum cleaners
EN IEC 61000-6-2:2019	Electromagnetic compatibility (EMC) - Part 6-2: Generic standards - Immunity for industrial environments
EN IEC 61000-6-4:2019	Electromagnetic compatibility (EMC) - Part 6-4: Generic standards - Emission for industrial environments

Name and address of the person authorised to compile the technical documentation:

Kernlochbohrer GmbH | Geigersbühlweg 52 | 72663 Großbettlingen | Germany

Großbettlingen 2025-11-15
Kernlochbohrer GmbH

Guido Pillat
Managing Director / Chief Executive Officer