KERNLOCHBOHRER®
PROFESSIONAL POWER TOOLS

Operating instructions

Diamond Core drilling machine

DKB202/H-PRO DKB202/P-PRO

BA-01-000008-05-EN

Scope of application

These Operating instructions only apply to the machine labelled on the cover sheet.

Check the machine model using the machine's rating plate.

Original instructions / translation of the original instructions

In accordance with the EU Machinery Directive, the German copy of these Operating instructions is the original instructions.

Copies in other languages are translations of the original instructions.

Kernlochbohrer GmbH

Geigersbühlweg 52

72663 Großbettlingen

Germany

Phone: +49 (0)70 22 / 50 34 900

E-mail: info@kernlochbohrer.com

Internet: http://www.kernlochbohrer.com

© Kernlochbohrer GmbH

This documentation is protected by copyright.

All rights to this documentation, in particular the right of reproduction, distribution and translation, are reserved by Kernlochbohrer GmbH, even in the case of applications for industrial property rights. No part of this documentation may be reproduced in any form by any means, electronic or mechanical, or processed, duplicated or distributed using electronic systems without the express written permission of Kernlochbohrer GmbH.

Subject to errors and technical changes.

Kernlochbohrer GmbH is not liable for any errors in this documentation. Liability for direct or indirect damages arising in connection with the delivery or use of this documentation is excluded to the extent permitted by law. Furthermore, Kernlochbohrer GmbH cannot be held liable for damages resulting from the infringement of patent and other rights of third parties.

The function of the machine is limited to the functions described in the associated technical documentation.

Table of contents

1 Information and support 6
1.1 Thanks to the buyer 6
1.2 Using the Operating instructions 6
1.3 Changes 6
1.4 Explanation of symbols 7
1.5 Guarantee 7
1.6 Environmental protection 7
1.6.1 Disposal of the product 7
1.6.2 Disposal of the packaging 8
1.7 Service 8
2 Security 9
2.1 General information 9
2.2 Intended use 9
2.3 Safety regulations for the operator 10
2.3.1 Organisational safety measures 10
2.3.2 Changes to the machine 10
2.3.3 Spare parts 11
2.3.4 Personnel 11
2.4 Safety regulations for staff 12
2.4.1 Safe behaviour 12
2.4.2 Safe operation 12
2.4.3 Protective equipment 14
2.5 Safety during maintenance 15
2.5.1 General information 15
2.5.2 Cleaning 15
3 Technical data 16
4 Machine description 18
4.1 Machine components 18
4.2 Protective devices 23
4.2.1 Soft-start function 23
4.2.2 Mechanical overload protection 23

4.2.3 Overvoltage protection 24
4.2.4 Electronic overload protection 24
4.2.5 Overheating protection 25
4.2.6 Carbon brush warning system 25
4.3 Scope of delivery 26
5 Utilisation of the machine 27
5.1 Specific precautions 27
5.2 Transport of the machine 28
5.3 Working with the machine 28
5.3.1 Visual inspection of the machine 28
5.3.2 Operating the machine in manual mode 29
5.3.3 Operating the machine on a core drill rig 30
5.3.4 Attach drill bit to machine 31
5.3.5 Establish water supply to the machine 32
5.3.6 Establish dust extraction of the machine 33
5.3.7 Establish electrical connection of the machine 33
5.3.8 Using the machine 35
5.3.9 Switch off the machine 39
5.3.10 Store the machine 40
6 Maintenance 41
6.1 Notes on proper maintenance 41
6.2 Maintenance and inspection plan 41
6.3 Inspection and maintenance 42
6.3.1 Clean machine and check 42
6.3.2 Check the condition of the transmission oil 44
6.3.3 Replacing carbon brushes 45
7 Troubleshooting 46
8 Spare parts 48
8.1 DKB202/H-PRO 48
8.2 DKB202/P-PRO 51
9 EU Declaration of Conformity 54

1 Information and support

1.1 Thanks to the buyer

Thank you for purchasing a machine from Kernlochbohrer GmbH.

Please read the Operating instructions carefully and observe the safety instructions. By following the Operating instructions, you will be able to fully utilise the outstanding performance of our product.

If you have any questions regarding the operation of the machine, please contact Kernlochbohrer GmbH directly. We are available to answer your questions at any time.

1.2 Using the Operating instructions

The machine is intended for professional use and may only be operated by trained personnel. Strictly adhere to the instructions in the Operating instructions.

Our company declines all responsibility in the event of non-compliance with the Operating instructions, which may result in injury or damage to the machine.

The Operating instructions are indispensable for using the machine. The Operating instructions must therefore always be kept in the vicinity of the machine and be accessible to the intended personnel at all times.

In addition to the Operating instructions, the generally applicable and local regulations for accident prevention and environmental protection must be provided; compliance with these regulations must be checked regularly.

1.3 Changes

Kernlochbohrer GmbH reserves the right to change the design and appearance of the products and their Operating instructions. Future changes to the Operating instructions will be made without prior notice.

1.4 Explanation of symbols

⚠ The symbol draws your attention to dangers that you must be aware of when carrying out the following work in order to avoid damage to yourself, other persons or property.

📖 Cross-reference to another point in the Operating instructions.

☑ Prerequisite for an action.

☒ Action to be performed.

↳ Behaviour of the machine that is to be expected as a result of the preceding action.

ⓘ Background information or reference to special features.

1.5 Guarantee

In accordance with Kernlochbohrer GmbH's general terms of delivery, a warranty period of 12 months applies to material defects in business transactions with companies (proof by invoice or delivery note).

Damage caused by natural wear and tear, overloading or improper handling is excluded.

Damage caused by material or manufacturer defects will be rectified free of charge by repair or replacement. Complaints can only be recognised if the device is sent to Kernlochbohrer GmbH undismantled.

Wear parts are excluded from the warranty.

1.6 Environmental protection

1.6.1 Disposal of the product

Follow national regulations on environmentally friendly disposal and recycling of used machines and accessories.

For EU countries only:

Do not dispose of the machine with household waste! In accordance with European Directive 2012/19/EU on waste electrical and electronic equipment and its transposition into national law, used power tools must be collected separately and recycled in an environmentally friendly manner.

1.6.2 Disposal of the packaging

The packaging is made from recyclable materials. They must be disposed of in accordance with their labelling and municipal guidelines.

1.7 Service

Precise information and specific questions allow faults to be rectified quickly, make it easier to order spare parts and prevent incorrect deliveries.

Before contacting the service, please collect the following data first.

The model designation must be stated in all enquiries and orders. This information can be found on the rating plate of the machine.

In the event of malfunctions, further information is required: type and extent of the malfunction, accompanying circumstances, suspected cause.

When ordering spare parts, the following is required: Quantity and item number in the exploded drawing in these Operating instructions.

ⓘ You are welcome to send us photos when ordering spare parts or videos in the event of faults.

Contact details:

Kernlochbohrer GmbH
Geigersbühlweg 52
72663 Großbettlingen
Germany
Phone: +49 (0)70 22 / 50 34 900
E-mail: info@kernlochbohrer.com
Internet: http://www.kernlochbohrer.com

2 Security

2.1 General information

The machine was built according to the state of the art and in compliance with the applicable laws, standards and safety regulations. Use of the machine may nevertheless result in hazards for the user or third parties and damage to the machine and other property.

The machine may only be used if it is in perfect working order and in accordance with its intended use and in a safe and hazard-conscious manner.

If the machine is damaged or malfunctions, switch it off immediately, secure it against being switched on again and repair it or arrange for it to be repaired.

2.2 Intended use

The machine is designed exclusively for drilling concrete, reinforced concrete, stone, masonry and similar materials with the appropriate core bits using wet or dry drilling methods.

The machine can be operated both in manual mode and with a core drill rig. When operating with a core drill rig, the use of a clamp holder with a clamping diameter of 60 mm is required.

Ensure that a core bit suitable for the drilling technique and the material to be drilled is always used. The machine must be connected to a dust extraction system or water supply to optimise the service life of the core bit.

The machine may only be used within the limits of its technical data. This information, for example performance data and ambient conditions, can be found in the "Technical data" chapter.

Any other or additional use is considered improper use - risk of accident! Kernlochbohrer GmbH is not liable for any resulting damage. The risk is borne solely by the operator. In order to be able to determine in the event of damage whether the damage was caused by improper use, overload conditions are permanently recorded by the machine.

Intended use also includes observing the operating instructions and complying with the prescribed maintenance intervals.

2.3 Safety regulations for the operator

2.3.1 Organisational safety measures

The Operating instructions must always be available for the operating and maintenance personnel. It must therefore always be kept at the machine's place of use.

The regulations on accident prevention and environmental protection applicable at the machine's place of use must also be available. The operator of the machine must regularly check compliance with these regulations.

The use of sound-emitting machines may be limited in time by national or local regulations.

The machine must not be operated in potentially explosive atmospheres or in the vicinity of flammable liquids, gases or combustible dust.

All safety and danger notices on the machine must be legible and must not be removed.

The protective equipment required to operate the machine must be provided by the operator. The operator must ensure that the protective equipment is used properly by the personnel.

Operating and auxiliary materials, such as lubricants or cleaning agents, must be selected in such a way that the limit values for hazardous substances applicable at the place of use are complied with. The regulations for environmental protection and disposal applicable at the place of use must be complied with.

2.3.2 Changes to the machine

The operator may not make any modifications to the machine without written authorisation from Kernlochbohrer GmbH. If the operator carries out modifications without authorisation, the warranty becomes void. Kernlochbohrer GmbH is not liable for damage caused by unauthorised modifications.

2.3.3 Spare parts

Spare parts must comply with the properties defined by Kernlochbohrer GmbH. This is always guaranteed for spare parts supplied by Kernlochbohrer GmbH. Kernlochbohrer GmbH is not liable for damage caused by the use of unsuitable spare parts.

2.3.4 Personnel

All persons who are authorised to commission, operate and maintain the machine must have read and understood the Operating instructions beforehand.

The machine may only be operated by persons who have been adequately instructed beforehand.

The machine may only be serviced by persons who have completed the appropriate specialised training for this activity.

Minors are not permitted to work with the machine. Young people over the age of 16 who are trained under supervision are exempt from this regulation.

2.4 Safety regulations for staff

2.4.1 Safe behaviour

All persons responsible for commissioning, operating and maintaining the machine must have read and understood the Operating instructions beforehand.

The machine may only be operated by persons who have been adequately instructed beforehand.

The machine may only be serviced by persons who have completed the appropriate specialised training for this activity.

Minors are not permitted to work with the machine. Young people over the age of 16 who are trained under supervision are exempt from this regulation.

Any work on and with the machine that could jeopardise safety must be avoided.

All safety and danger notices on the machine must be legible and must not be removed.

2.4.2 Safe operation

Operating the machine requires the full concentration and ability of the personnel. Persons who are overtired, unable to concentrate or under the influence of alcohol, drugs or medication must not work on or with the machine.

Persons who are not directly required to operate the machine must maintain a sufficient safety distance from the machine.

Before using the machine, check that it is in perfect condition. If the machine is damaged, it must not be used. Then secure the machine against use and repair it or arrange for it to be repaired.

In order not to jeopardise the functionality and safety of the machine, covers or other components of the machine must not be removed.

Before starting or starting up the machine, ensure that persons are not endangered by the starting machine.

Operating elements must not be operated thoughtlessly or wilfully. This could result in personal injury or damage to the machine.

When using the machine, personnel must ensure that they stand securely and adopt an ergonomic posture.

If the machine is used in manual mode, it must always be held with both hands.

The machine must not be left unattended during use.

Stopping the machine during operation with a heavy load must be avoided. This could lead to damage due to overheating.

Air inlet and outlet openings must not be covered during use.

The machine must not be exposed to rain or moisture and must never be immersed in water. Water entering the machine increases the risk of electric shock.

The machine must be cleaned regularly so that dirt does not accumulate. All operating elements and handles must be kept clean, dry and free of grease.

When the machine is not in use, it must be parked in such a way that nobody is endangered. Secure the machine against unauthorised use.

2.4.3 Protective equipment

Persons using the machine are obliged to wear the following protective equipment:

- Safety goggles according to standard EN 166 or face protection.
- If the noise emissions generated when using the machine exceed the limit values applicable to this workplace, suitable hearing protection must be worn.

ⓘ The following applies in Germany: The wearing of hearing protection is mandatory from a daily noise exposure level of 85 dB(A) or a peak sound pressure level of 137 dB(C).

The generation of harmful sanding dust must be prevented by technical means (wet process or dry process with dust extraction). If this is not possible, the operating personnel and bystanders must always wear a respirator approved for the material being processed.

Wearing additional protective equipment reduces the risk of injury:

- Safety shoes with non-slip sole and protective toe cap.
- Cut-resistant and non-slip gloves.
- Safety helmet

Loose-fitting clothing, long hair or body jewellery can get caught on moving parts of the machine!

Persons carrying out maintenance work on the machine are obliged to wear the appropriate protective equipment required for this work.

2.5 Safety during maintenance

2.5.1 General information

The machine may only be serviced by persons who have completed the appropriate specialised training for this activity.

The maintenance activities and intervals specified in the Operating instructions must be observed.

Workshop equipment appropriate to the type of work is required to carry out maintenance activities.

The following safety precautions must be taken before starting maintenance work:

- Position the machine so that the access point is easily accessible.
- Set the machine to the appropriate operating status.

After completion of maintenance activities:

- Assemble the machine completely.
- If operating elements or safety devices have been removed, they must be refitted and their function checked.
- Retighten any screw connections that have been loosened. Re-attach the screw locks.

Persons carrying out maintenance work on the machine are obliged to wear the appropriate protective equipment required for this work.

2.5.2 Cleaning

Do not use any corrosive, harmful or environmentally damaging substances to clean the machine. Dispose of cleaning agents in an environmentally friendly manner.

Under no circumstances should high-pressure cleaners, water jets or compressed air be used to clean the machine.

3 Technical data

Type	DKB202/H-PRO	DKB202/P-PRO
Article number	6202	6203
Power consumption	2200 W	
Tension	230 V ±5% / 50 Hz	
Power consumption	10 A	
Spindle thread	1 ¼" UNC & G ½"	
	Aisle 1 / Aisle 2 / Aisle 3	
Speed	650 1/min / 1300 1/min / 2600 1/min	
Max. Drill-Ø		
without core drill rig	162 mm / 82 mm / 42 mm	
with core drill rig	202 mm / 102 mm / 62 mm	
Weight	7.5 kg	7.8kg
Permissible ambient temperature	5°C to 40°C	
Permissible relative humidity	30% to 80%	
Protection class	I	
Connector plug	Type F (CEE 7/4)	
Mains cable: Type | Length	G-HPMCE 3x 1.5 mm² | 3 m	
Vibration value	4 m/s²	
Water/dust connection	GEKA® -coupling 3/4"	
Water supply adapter	Gardena	
Dust extraction adapter	For hose Ø 35 mm	

Type	DKB202/H-PRO	DKB202/P-PRO
Compatible core drill rig	KBS252/Light-K or KBS252/PRO or TBS3000/PRO	
Storage case dimensions	650 x 460 x 215 mm	

4 Machine description

4.1 Machine components

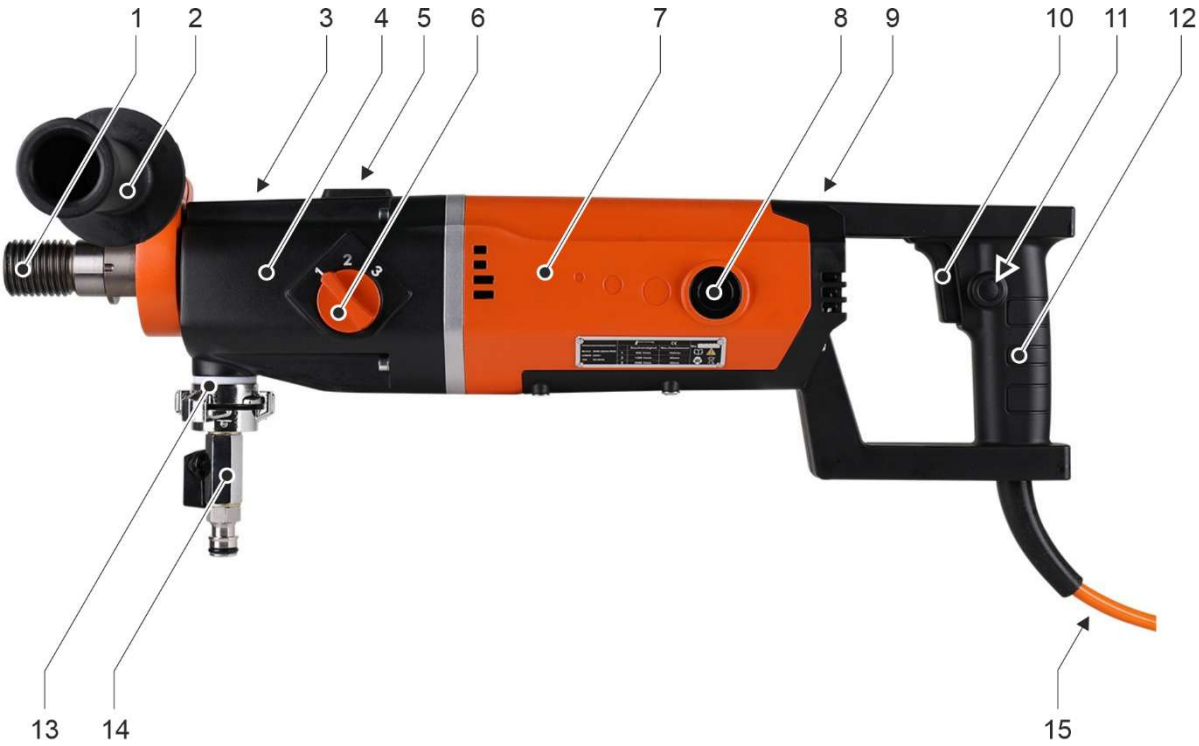

Machine components DKB202/H-PRO

1 Drill spindle
2 Clamping neck handle (mounted on the clamping neck)
3 Control holes for water supply (on top of clamping neck and gearbox housing)
4 Gearbox housing
5 Dragonfly
6 Gear selector switch
7 Motor housing
8 Carbon brush cover
9 LED displays
10 Switches
11 Switch interlock
12 Main handle
13 Connection for water supply or dust extraction
14 Adapter for water supply
15 Mains cable with personal protection circuit breaker (PRCD)

1
2
3
4
5
6
7
8
9
10
11
12
13
14
15

Machine components DKB202/P-PRO

1 Drill spindle
2 Clamping neck (for mounting the clamping neck handle)
3 Control holes for water supply (on top of clamping neck and gearbox housing)
4 Gearbox housing
5 Dragonfly
6 Gear selector switch
7 Motor housing
8 Carbon brush cover
9 LED displays
10 Connection for water supply or dust extraction
11 Adapter for water supply
12 Switches
13 Switch interlock
14 Main handle
15 Mains cable with personal protection circuit breaker (PRCD)

Personal protection circuit breaker (PRCD)

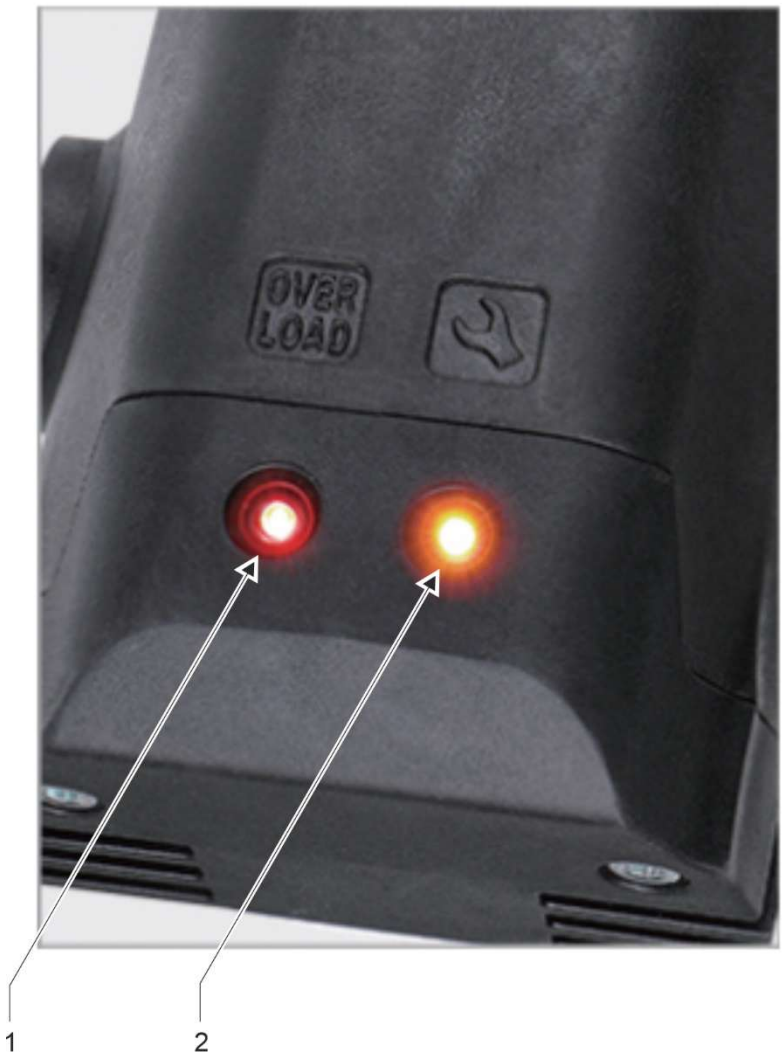

LED indicators on the top of the motor housing

1 Overload" LED

2 LED "🛠 " (overheating protection)

ⓘ If both LEDs light up at the same time, the carbon brushes of the motor must be replaced.

📖 See chapter 6.3.3 "Replacing carbon brushes".

4.2 Protective devices

4.2.1 Soft-start function

The machine is equipped with a soft-start function, which offers the following advantages by gradually increasing the speed and power:

- Reduced start-up load on the machine and the power supply.
- Better control of the machine and greater precision when starting the drilling process.
- Torque surges are reduced, making it safer and more comfortable for the user.
- A smooth start reduces the risk of cracks and fractures in the material.

4.2.2 Mechanical overload protection

This machine is equipped with a mechanical slip clutch to protect the operator and the machine from excessive torque forces. If the drill bit suddenly jams in the hole, the safety clutch is triggered and the drill spindle stops

The slipping clutch must not be loaded for longer than 3 to 4 seconds. If the slipping clutch is activated during the drilling process, the feed pressure must be reduced immediately. Otherwise, the safety clutch may be destroyed due to the high level of wear. Once the drill bit has returned to normal speed, the drilling process can be continued.

Risk of injury!

A worn slipping clutch must be replaced immediately in a specialised workshop.

4.2.3 Overvoltage protection

The machine can absorb short-term voltage peaks of up to a maximum of 260 volts. Higher voltages can cause irreparable damage, which is why the machine switches off for its own protection.

Please note that if the machine is operated with a generator, it must not exceed the maximum specified value.

If the overvoltage protection trips during operation of the machine, the power supply must be checked and replaced if necessary.

4.2.4 Electronic overload protection

There are 2 LED indicators on the top of the motor housing.

If the machine is in an overload state, the red LED labelled "Overload" lights up. This signals to the operator that the maximum power supply has been reached. The feed pressure must then be reduced immediately until the red LED goes out.

If the machine is operated in an overload state for a longer period of time, the machine switches off for its own protection and the red LED lights up permanently. Shutting down the machine due to an overload constitutes improper use and can result in the warranty for the machine being voided.

After shutting down the machine due to an overload, disconnect the machine from the mains and carry out the following checks:

- Drill bit not jammed in the hole?
- Gear selector engaged in the desired position?
- Can the drill bit rotate normally?

The machine can then be restarted.

4.2.5 Overheating protection

If the temperature of the machine's motor becomes too high, the built-in thermal circuit breaker is triggered and the machine switches off to protect itself. At the same time, the yellow LED light labelled "🛠 " lights up.

If the overheating protection is triggered during operation of the machine, the machine must not be restarted immediately. The machine must first cool down for approximately 2 to 3 minutes.

4.2.6 Carbon brush warning system

When the carbon brushes have almost reached the end of their service life, the machine switches off automatically to protect the motor from further damage.

If both the red and yellow LEDs light up, the carbon brushes must be checked and replaced if necessary. The carbon brushes must only ever be replaced as a pair.

📖 See chapter 6.3.3 "Replacing carbon brushes".

4.3 Scope of delivery

The scope of delivery of the machine includes the following components:

- DKB202/H-PRO or DKB202/P-PRO diamond core drilling machine
- Clamping neck handle (with clamping diameter Ø 60 mm)
- Adapter for water supply
- Adapter for dust extraction
- Easy release ring
- Open-end spanner SW 32 and SW 41
- Set (2 pieces) of replacement carbon brushes
- Pair of earplugs
- Safety goggles
- Storage case
- Operating instructions

ⓘ Kernlochbohrer GmbH offers an extensive range of tools and accessories for the machine:

- Core drill rig
- Core bits
- Adapter for core bits
- Quick-change systems for core bits
- Water collection rings

The webshop http://www.kernlochbohrer.com is available for information and ordering.

5 Utilisation of the machine

5.1 Specific precautions

Risk of injury!

When operating the machine, persons must always keep a sufficient distance.

Rotating parts of the machine and falling or splashing particles can cause injuries.

Danger of electric shock!

The machine does not have the appropriate degree of protection and must therefore not be operated in the rain or in wet rooms (e.g. bathrooms or laundry rooms).

Only use core bits whose cutting segments are sharp and undamaged. Sharp drill bits do not tilt as quickly when drilling and are easier to guide.

When using the machine for drilling vertically upwards, a functional water collection ring must be used. Water must not be allowed to reach the machine.

Before starting the drilling process, the intended exit point of the drill bit must be inspected. The exit point must be secured and shut off. It must be ensured that no personal injury or material damage is caused by the escaping drill bit.

If a fault occurs during operation of the machine (e.g. smell of burning), switch off the machine immediately and disconnect the mains cable from the plug. Otherwise a fire, electric shock or other incident could occur. The machine must not be switched on again until the fault has been rectified and the machine is functioning correctly.

5.2 Transport of the machine

Before transporting the machine:

- Switch off the machine.
- Remove the mains cable from the socket.
- Disconnect the water supply or dust extraction system.

5.3 Working with the machine

5.3.1 Visual inspection of the machine

Before working with the machine, it must be visually inspected:

- Check the general condition and cleanliness of the machine.
- Check that all covers and machine components are present.
- Check that all screws are tight.
- Air inlet and outlet openings must not be dirty or covered.
- The mains cable and mains plug must not be damaged.

5.3.2 Operating the machine in manual mode

The machine can be operated in manual mode or on a core drill rig.

If the machine is used in manual mode, the supplied clamping neck handle with clamping diameter Ø 60 mm must be attached to the clamping neck of the machine.

Only use the machine in manual mode with the clamping neck handle fitted!

Always hold the machine firmly with both hands during drilling!

Procedure:

☑ Machine not connected to the power supply.

☑ Visual inspection of the machine carried out.

🕮 See chapter 5.3.1 "Visual inspection of the machine".

☒ Attach the clamping neck handle to the clamping neck of the machine.

5.3.3 Operating the machine on a core drill rig

The machine can be operated in manual mode or on a core drill rig.

If the machine is operated on a core drill rig, it must be attached to this with a clamp holder with a diameter of Ø 60 mm.

ⓘ The core drill rig may have to be purchased separately.
Kernlochbohrer GmbH offers an extensive range of tools and accessories for the machine. The webshop http://www.kernlochbohrer.com is available for information and ordering.

Before working with the machine, the core drill rig must be secured in the drilling position.

The machine must not be attached to the core drill rig.

🕮 Information on attaching the core drill rig can be found in its Operating instructions.

Procedure:

☑ Machine not connected to the power supply.

☑ Visual inspection of the machine carried out.

🕮 See chapter 5.3.1 "Visual inspection of the machine".

☑ Core drill rig attached to the drilling position and aligned.

☒ Attach the machine to the core drill rig.

ⓘ The machine is attached to the core drill rig using a clamp holder with a diameter of Ø 60 mm. This fastening material is included in the scope of delivery of the core drill rig.

🕮 Information on mounting the machine on the core drill rig can be found in its Operating instructions.

5.3.4 Attach drill bit to machine

A drill bit is a cylindrical tool that is fitted with soldered or laser-welded cutting segments.

To mount the drill bit on the machine, the drill spindle is equipped with a 1 ¼" UNC external thread and a G ½" internal thread.

ⓘ Appropriate adapters are available for drill bits with different threads.

ⓘ To prevent corrosion and to facilitate disassembly of the core bit, a water-resistant grease can be applied to both threads before assembly.

ⓘ A quick-change system can be used to change drill bits quickly and easily.

To remove the drill bit from the drill spindle easily, you can use the easy release ring supplied or a copper ring.

⚠ Risk of injury from sharp-edged cutting segments of the drill bit!

Wear cut-resistant gloves!

<u>Auxiliary means:</u>

Water-resistant lubricating grease

Open-end spanner with width across flats SW 32 and SW 41

<u>Procedure:</u>

☑ Machine not connected to the power supply.

☑ Visual inspection of the machine carried out.

🕮 See chapter 5.3.1 "Visual inspection of the machine".

☑ If the machine is to be used with a core drill rig:

Core drill rig attached to drilling position and aligned and machine attached to core drill rig.

🕮 See chapter 5.3.3 "Operating the machine on a core drill rig".

☒ Screw the drill bit onto the drill spindle of the machine and tighten hand-tight.

☒ Tighten the drill bit with an open-end spanner SW41 and hold the drill spindle of the machine with an open-end spanner SW32.

5.3.5 Establish water supply to the machine

ⓘ The machine can be used for wet or dry drilling.

In the wet drilling process, the water is used to cool the drill bit so that it does not heat up excessively during drilling, which would cause increased wear.

ⓘ Only clean water may be used.

Only clean and dust-free hoses and couplings may be used.

The maximum water pressure must not exceed 3 bar.

ⓘ When using the machine for wet drilling, we recommend the use of an additional water collection ring to protect the machine and the working environment.

Kernlochbohrer GmbH offers an extensive range of tools and accessories for the machine. The webshop http://www.kernlochbohrer.com is available for information and ordering.

Procedure:

☒ Attach the water connection to the machine interface.

☒ Close the ball valve on the water connection (in the transverse position).

☒ Connect the machine's water connection to a water hose.

5.3.6 Establish dust extraction of the machine

ⓘ The machine can be used for wet or dry drilling.

When dry drilling, the drilling dust produced must be removed using a suitable industrial hoover.

Procedure:

☒ Attach the vacuum cleaner connection to the machine interface.

☒ Attach the industrial hoover to the vacuum cleaner connection.

5.3.7 Establish electrical connection of the machine

Please note the following points:

- Observe the electrical connection values of the machine.
  📖 See chapter 3 "Technical data".
- Before connecting the machine to the power supply, ensure that the machine is switched off.
- The mains cable and mains plug must not be damaged.
- Damaged mains plugs may only be replaced by Kernlochbohrer GmbH or a qualified electrician.
- The machine is equipped with a type F mains plug (CEE 7/4). The machine may only be operated from an earthed socket (CEE 7/3) that is appropriately earthed.
- To protect the operator and reduce the risk of electric shock, the machine is equipped with a personal protection circuit breaker (PRCD) integrated into the mains cable. The machine may only be connected to the mains using this personal protection circuit breaker.
- After plugging the mains plug into the socket, the personal protection switch must be subjected to a test run. If the personal protection switch does not trip, the machine must be disconnected from the mains again and checked by a qualified electrician.
- Never touch the mains plug with wet hands.
- The mains plug and socket must be clean and dust-free.
- The supplied electrical voltage must not deviate by more than 5% from the nominal value. Excessive voltages can lead to irreparable damage to the machine.

- Voltage peaks must not occur when operating the Core drolling machine with power generators.
- When using extension cables, the cable cross-section must be suitable for the power consumption of the machine.
- When using a cable reel, the cable must always be unrolled completely.
- If the machine is used outdoors with an extension cable, the extension cable must be approved for outdoor use.
- Grasp the mains plug to remove the mains cable from the socket. Do not pull on the mains cable.
- Do not use the mains cable to pull or transport the machine and keep it away from heat, solvents and oils, sharp edges and moving parts.
- If the machine is not to be used for a longer period of time, switch off the machine and remove the mains plug from the socket.

5.3.8 Using the machine

Before starting or starting up the machine, ensure that the tools used to mount the drill bit have been removed from the drill spindle.

Only use the machine in manual mode with the clamping neck handle fitted!

Always hold the machine firmly with both hands during drilling!

Auxiliary means:

Open-end spanner with width across flats SW 32

Procedure:

☑ Visual inspection of the machine carried out.

☑ When using the machine in manual mode:
Clamping neck handle attached to machine.
🕮 See chapter 5.3.2 "Operating the machine in manual mode".

☑ When using the machine with a core drill rig:
Machine attached to the core drill rig.
🕮 See chapter 5.3.3 "Operating the machine on a core drill rig".

☑ Drill bit mounted on the machine.
🕮 See chapter 5.3.4 "Attach drill bit to machine".

☑ Water supply or dust extraction of the machine.
🕮 See chapter 5.3.5 "Establish water supply to the machine" or chapter 5.3.6 "Establish dust extraction of the machine".

☑ Electrical connection of the machine established.
🕮 See chapter 5.3.7 "Establish electrical connection of the machine".

☒ Set the desired speed on the machine's gear selector switch according to the drilling diameter.

📖 See chapter 3 "Technical data".

ⓘ The specified drilling diameters and speeds of the machine are based on an average concrete hardness.

A lower gear should be selected for reinforced concrete in order to reduce the speed.

ⓘ The gear selector switch may only be operated when the machine is switched off.

Turn the gear selector switch and allow it to engage in the desired position.

If the gear selector switch is stiff, turn the drill spindle slightly using an open-end spanner with a width across flats of 32 to enable gear selection.

☒ Carry out a function test of the personal protection circuit breaker (PRCD):

☒ Hold the personal protection switch in your hand and press the "TEST" button with your bare finger. Do not use gloves or other insulating objects.

↳ As soon as the personal protection switch is switched on, the electronics check whether the protective earth conductor (PE) is free of mains voltage.

☒ Switch off the personal protection switch by pressing the "RESET" button.

☒ Switch on the personal protection switch again by pressing the "TEST" button.

↳ The machine must now be able to be operated.

⚠ If the personal protection switch does not trip or repeatedly switches off when the machine is switched on, the entire combination must be checked by a qualified electrician.

Use of the machine in this condition is not permitted!

☒ Switch on the machine at the switch and let it run briefly: Check the concentricity of the drill bit.

☒ Switch on the machine at the switch without load.

ⓘ With the switch lock, the machine can be operated without having to operate the switch manually.

- ☒ If the machine is to be used for dry drilling:
  - ☒ Switch on the hoover.
  - ☒ When the hoover has built up the maximum vacuum: Carefully start drilling.
- ☒ If the machine is to be used for wet drilling:
  - ☒ Open the ball valve on the water connection
  - ☒ If water emerges continuously from the centre of the drill bit: Start drilling carefully.
- ☒ If the machine is to be used in manual mode:
  - ☒ Start the drilling process with a first cut by not placing the full cutting surface of the drill bit on the surface: Position the machine at an angle so that the surface is drilled with a V-notch cut.
  - ☒ As soon as there is a V-notch cut on the surface: Align the machine and drill bit perpendicular to the surface and increase the feed pressure.
- ☒ When the cutting depth has reached 10 mm, the feed pressure can be increased.

  ⓘ If you are drilling at too high a speed or too high a feed pressure, this can cause the drill bit to jam.
- ☒ During the drilling process, continuously observe the LED displays on the top of the motor housing:

  If the red ‘Overload’ LED lights up: Immediately reduce the feed pressure.
- ☒ Continuously monitor the speed of the machine during the drilling process:

  If the speed drops, reduce the feed pressure.
- ☒ If the machine is used for wet drilling:

  If the feed rate decreases at the same feed pressure and the water emerging from the hole becomes clearer but is mixed with metal chips, the drill bit has hit reinforcing steel.

  Reduce the feed pressure until the reinforcing bar is cut through.

☒ If the machine is used for wet drilling:

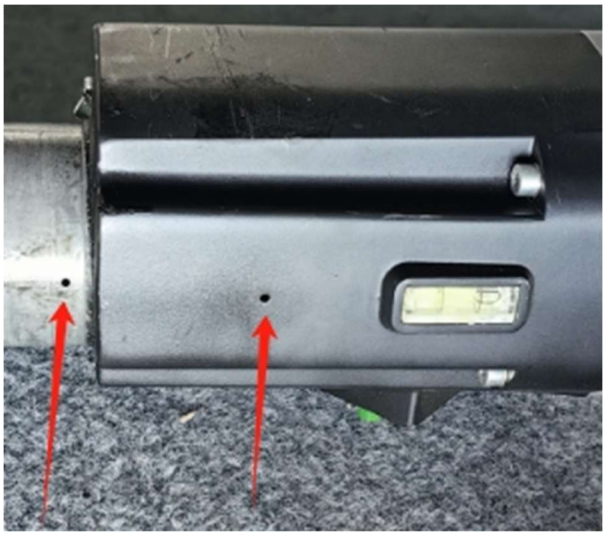

Continuously check the inspection holes of the water supply on the top of the clamping neck and gearbox housing.

If water leaks there, the machine's water seals are worn and must be replaced immediately.

☒ If the machine is used for wet drilling:

Dust and particles that form during drilling can clog the water supply system. If the amount of water supplied to the drill bit is too low:

Check the water supply system and clean if necessary.

☒ If wooden beams, thick asphalt or bitumen are cut through, the machine's power supply increases. Then reduce the feed pressure.

☒ If it is necessary to drill deeper than the usable length of the drill bit allows, an optional drill extension can be used.

☒ Continuously monitor the machine during the drilling process:

If light smoke appears or the odour of an overloaded electric motor can be detected, relieve the machine and withdraw it from the hole.

Then continue drilling slowly and carefully.

☒ When the end of the through-hole is almost reached:

Reduce the feed pressure until the core bit emerges on the opposite side.

5.3.9 Switch off the machine

Procedure:

☒ Switch off the machine motor at the switch.

☒ Close the ball valve and disconnect the water supply.
Or:
Switch off the hoover and disconnect the dust extraction system.

☒ Remove the mains plug from the socket.

☒ If necessary, remove the machine from the core drill rig.

☒ Remove the core bit from the machine.

☒ Check the machine for soiling. Clean the machine if necessary.

🕮 See chapter 6.3.1 "Clean machine and check".

5.3.10 Store the machine

Procedure:

☑ Machine switched off.

🕮 See chapter 5.3.9 "Switch off the machine".

☒ Clean the machine and allow to dry completely.

🕮 See chapter 6.3.1 "Clean machine and check".

☒ Store the machine in a dry, cool place protected from moisture and direct sunlight.

☒ Secure the machine against unauthorised use.

6 Maintenance

6.1 Notes on proper maintenance

Insufficient or improper maintenance can cause malfunctions and impair the operational safety and service life of the machine. Regular inspection and maintenance is therefore essential. We recommend that maintenance work is only carried out by trained personnel.

The contractually agreed warranty does not release the operator of the machine from the obligation to maintain the machine in accordance with the manufacturer's instructions from the time of commissioning. Kernlochbohrer GmbH is not liable for damage caused by a lack of maintenance.

6.2 Maintenance and inspection plan

The interval specifications refer to normal operating conditions. In more difficult conditions (heavy dust accumulation, etc.) and longer daily working times, the specified intervals must be shortened accordingly by the operator.

Only use the maintenance and inspection schedule as a guide! Be sure to follow the cross-references to the other chapters! They describe in detail how to carry out the individual tasks correctly and safely.

Interval	Category	Component	Activity	Chapter
1 day	Real time	Machine	Cleaning and testing	6.3.1
200 hours	Operating time	Gearbox	Check transmission oil	6.3.2
200 hours ①	Operating time	Engine	Replacing carbon brushes	6.3.3

① This activity must be carried out after 200 hours of operation or after the carbon brush warning system responds.

6.3 Inspection and maintenance

6.3.1 Clean machine and check

Do not use sharp sponges or metal objects to clean the machine. These could damage the surface of the machine.

Do not use high-pressure cleaners, water jets or compressed air to clean the machine. The sharp water or air jet could damage the machine.

No corrosive, harmful or environmentally damaging substances may be used to clean the machine.

Interval:

1 day real time

Auxiliary means:

- Container with a mixture of water and mild detergent (e.g. washing-up liquid).
- Cloth and brush
- Water-resistant lubricating grease

Procedure:

☑ Switch off the machine and remove the mains plug from the socket.

📖 See chapter 5.3.9 "Switch off the machine".

☒ Clean the machine to remove dust and dirt.

- Use a damp cloth dipped in water mixed with a mild detergent.
- No water may enter the interior of the machine via the air inlet and outlet openings.

☒ Clean the air inlet and outlet openings with a brush and damp cloth.

☒ Allow the machine to dry completely.

☒ Check the tightness of all bolts and nuts on the machine. If necessary, tighten the screws and nuts.

- ☒ Check the condition and effectiveness of the water seals. Replace damaged or worn water seals.
- ☒ Check the gearbox housing for oil leaks. If oil is leaking from the gearbox, contact Kernlochbohrer GmbH.
- ☒ Check the mains plug and mains cable for damage. Have damaged parts replaced by a qualified electrician.
- ☒ Carry out a test run of the personal protection circuit breaker (PRCD). If the PRCD does not trip during the test run, have the appliance checked by a qualified electrician.
- ☒ Apply a thin layer of water-resistant grease to the external thread of the machine's drilling spindle.

6.3.2 Check the condition of the transmission oil

Interval:

200 hours operating time

Auxiliary means:

Plastic oil dipstick, diameter approx. 5 mm

Procedure:

☑ Switch off the machine and remove the mains plug from the socket.
📖 See chapter 5.3.9 "Switch off the machine".

☒ Drill bit separated from machine.

☒ Set up the machine with the drill spindle pointing upwards and secure it against falling over.

☒ Remove the M10x1 screw plug (position 14 in the spare parts drawing) from the gearbox housing.

☒ Remove a small amount of gearbox oil from the gearbox housing using an oil dipstick.

☒ Check the condition of the transmission oil on the oil dipstick.
Are many impurities visible in the transmission oil?
Change the gear oil.
Gear oil to be used: Mobil Delvac Gear Oil 80W-90
Required quantity: 0.35 litres

☒ Check the condition of the screw plug seal. If necessary, replace the screw plug.

☒ Attach the screw plug to the gearbox housing.

☒ After recommissioning the machine: Check the screw plug for leaks.

6.3.3 Replacing carbon brushes

ⓘ This operation must be carried out after 200 hours of operation or after the carbon brush warning system responds (red and yellow LEDs light up simultaneously).

ⓘ The carbon brushes may only ever be replaced as a pair!

Interval:

200 hours operating time

Spare part:

Set (2 pieces) of replacement carbon brushes (article number E13.59)

Procedure:

☑ Switch off the machine and remove the mains plug from the socket.
🕮 See chapter 5.3.9 "Switch off the machine".

☒ Remove the cover (position 58 in the spare parts drawing) of the carbon brush.

☒ Remove the carbon brush (position 59) from the carbon brush holder (position 60).

☒ Insert a new carbon brush into the carbon brush holder.

☒ Fit the cover of the carbon brush holder.

☒ Replace the carbon brush on the opposite side of the motor as well.

7 Troubleshooting

If a fault occurs during operation of the machine, please first try to rectify the fault yourself using the following information.

If you are unable to rectify the fault yourself, please contact Kernlochbohrer GmbH.

Malfunction	Possible cause	Troubleshooting
Machine does not start	Power supply interrupted	Plug in another electrical appliance and check the function of the power supply
	Mains plug not plugged in correctly.	Insert the mains plug correctly
	Personal protection switch not reset	Press the reset button on the personal protection switch
	Loose contact on the personal protection switch	Have the personal circuit breaker replaced by a qualified electrician
	Power cable or switch damaged	Have the mains cable or switch replaced by a qualified electrician
	Rotor or stator damaged	Have it checked by a qualified electrician and replaced if necessary
	Loose contact on carbon brushes or worn carbon brushes	Clean the spring of the carbon brushes and adjust the spring preload. If the length of the carbon brushes is less than 6 mm: Replace the carbon brushes
Leakage from water seals	Water seals worn out	Replacing water seals

Malfunction	Possible cause	Troubleshooting
Drill bit is stuck or jammed	Gear is not properly engaged	Turn the gear selector to the desired gear and let it engage
	Slipping clutch worn	Replace slipping clutch
	High steel content in concrete or very hard material	After switching off the machine, adjust the position of the core bit slightly using a spanner and tap the tube of the core bit carefully and gently with a wooden hammer handle until the stuck core bit comes loose. Slowly pull out the core bit and restart the machine
	Gearbox damaged	Have the gearbox replaced
Drilling speed too slow	End of the service life of the drill bit reached or cutting segments broken off	Check drill bit and replace if necessary
	Too much cooling water leads to inefficient cutting of the cutting segments	Reduce water flow
	Blunt drill bit	Resharpen cutting segments
	High steel content in concrete or very hard material	Reduce the feed pressure to cut through steel or hard material. Then increase again
	Drilling angle adjusted	Realign the drilling angle so that the drill bit is perpendicular to the cutting surface
Drill spindle wobbles	Drill spindle worn	Have the drill spindle replaced
Flying sparks at the collector	Short circuit or interruption on the rotor coil	Have the rotor replaced
	Loose contact on carbon brushes	Clean the carbon brush spring and adjust the spring preload. If the length of the carbon brushes is less than 6 mm: Replace the carbon brushes
	Commutator worn	Have the rotor replaced

8 Spare parts

8.1 DKB202/H-PRO

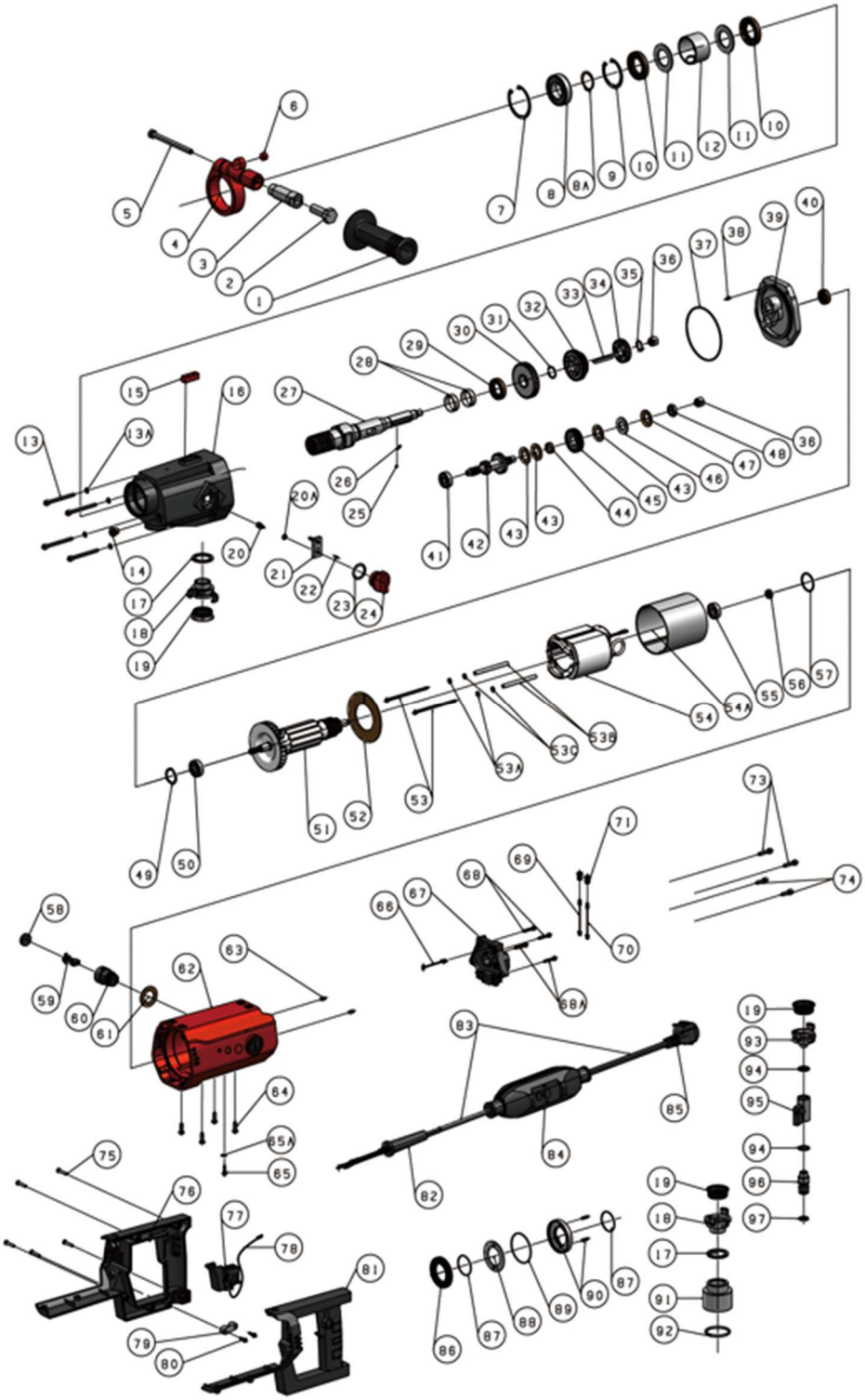

No.	Designation	No.
1	Front handle, plastic	1
2	Hexagon head screw M14x40	1
3	Connecting rod of the front handle	1
4	Clamp mount for front handle	1
5	Hexagon head screw M8x100	1
6	Spirit level Ø12	1
7	Inner circlip Ø 52	1
8	Deep groove ball bearing 6028Z	1
8A	Inner circlip Ø28	1
9	Inner circlip Ø47	1
10	Rotary shaft seal TC 28x47x7	2
11	Water ring disc	2
12	Water ring bushing	1
13	Hexagon socket screw M5x55	4
13A	Washer Ø5xØ9x1	4
14	Screw plug with seal M10x1	1
15	Square spirit level 10x10x30	1
16	Gearbox housing	1
17	Seal (Ø35xØ27,1x3)	2
18	Quick coupling G3/4"	2
19	Specially moulded sealing ring for coupling piece	3
20	Hexagon head screw M5x10	1
20A	Spring washer Ø5	1
21	Gear stick	1
22	Parallel pin Ø 3x8	1
23	O-ring 26x3	1
24	Selector lever	1
25	Steel ball 5/32" (Ø3.969)	1
26	Pressure spring	1
27	Spindle shaft	1
28	Water ring shaft sleeve (Ø28xØ26x9.5)	2
29	Rotary shaft seal TC 22x35x7	1
30	Spur gear Z45-M1.25	1
31	Circlip with constant cross-section Ø18	1
32	Pinion Z39-M1.25	1
33	Parallel key 5x5x40	1
34	Spur gear Z29-M1.25	1
35	Circlip with constant cross-section Ø14	1

No.	Designation	No.
51	Rotor complete (230V)	1
52	Wind deflector	1
53	Hexagon head screw M4x85	2
53A	Washer Ø4xØ9x1	4
53B	M4 insulating sleeve	2
53C	Insulating disc	4
54	Stator complete (230V)	1
54A	Stator insulating sleeve	1
55	Deep groove ball bearing 6000Z	1
56	Magnetic ring, class 2 (Ø14xØ7x5.5)	1
57	O-ring 26x2	1
58	Carbon brush cover	2
59	Carbon brush	2
60	Carbon brush holder	2
61	Insulating disc	2
62	Motor housing	1
63	Grub screw with tapered tip M5x10	2
64	Hexagon head screws with mush-room head M5x15	4
65	Phillips screw M4x6	1
65A	Serrated lock washers External serration M4	1
66	Temperature sensor cable	1
67	Motor PCB (230 V)	1
68	Cheese head screw with hexagon socket M4x20	2
68A	Cheese head screw with hexagon socket M4x16	2
69	Yellow LED	1
70	Red LED	1
71	LED socket	2
73	Allen screw with hexagon socket M5x20	2
74	Allen screw with hexagon socket M5x15	2
75	Cross recess countersunk head sheet metal screw M4x25	5
76	Handle cover right	1
77	Switches	1
78	Switch cable	1
79	Cable clamp	1
80	Phillips countersunk head sheet metal screw M3.5x12	2
81	Handle cover left	1
82	Mains cable gland	1
83	Mains cable (230V / 3x1.5²)	1

No.	Designation	No.
36	Drawn cup needle HK1010	2
37	O-ring 87x2	1
38	Parallel pin Ø4x8	1
39	Gearbox cover plate	1
40	Rotary shaft seal TC 12x24x7	1
41	Deep groove ball bearing 629Z	1
42	Ritzelwelle M1,25/Z24-M1,25/Z15-M1,25/Z8	1
43	Copper friction disc	3
44	Sleeve of the gear shaft	1
45	Helical gear M1/Z35/Clockwise rotating	1
46	Clutch disc	1
47	Disc spring	1
48	Hexagon nut M12x1.25 T=6	1
49	Shaft disc Ø28	1
50	Deep groove ball bearing 6001Z	1

No.	Designation	No.
84	PRCD (230V)	1
85	Mains plug (230V)	1
86	Anti-loss clamp	1
87	O-ring 32x1.5	2
88	Anti-loss disc	1
89	O-ring 49x1.5	1
90	Anti-loss base	1
91	Dust extraction coupling	1
92	O-ring 42x3.1	1
93	Quick disconnect coupling G1/2"	1
94	Washer for mounting BS/A12.7 (12.7x19x1.5)	2
95	Water valve switch	1
96	Water valve coupling	1
97	O-ring 16x3.1	1

8.2 DKB202/P-PRO

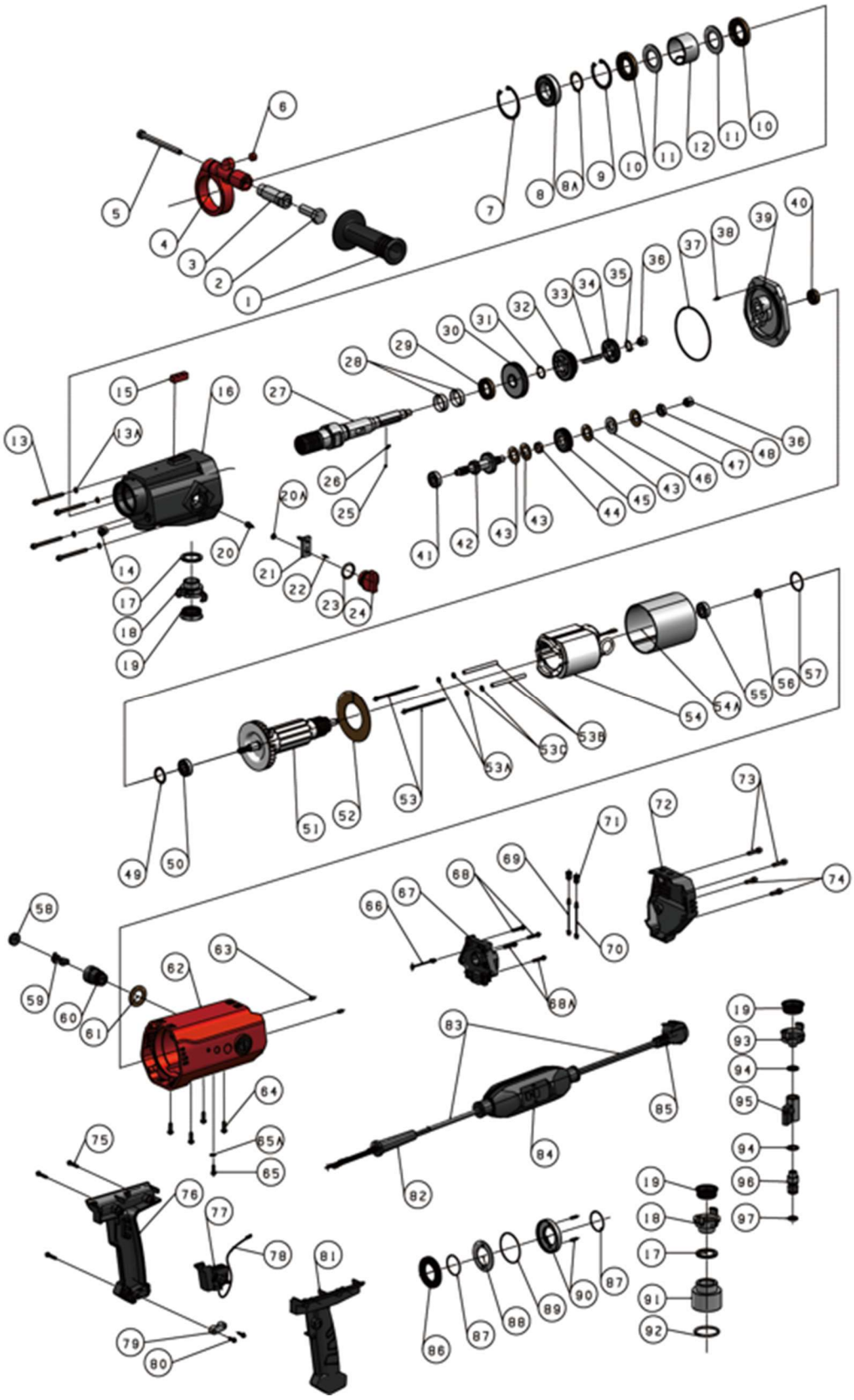

No.	Designation	No.
1	Front handle, plastic	1
2	Hexagon head screw M14x40	1
3	Connecting rod of the front handle	1
4	Clamp mount for front handle	1
5	Hexagon head screw M8x100	1
6	Spirit level Ø12	1
7	Inner circlip Ø52	1
8	Deep groove ball bearing 6028Z	1
8A	Inner circlip Ø28	1
9	Inner circlip Ø47	1
10	Rotary shaft seal TC 28x47x7	2
11	Water ring disc	2
12	Water ring bushing	1
13	Hexagon socket screw M5x55	4
13A	Washer Ø5xØ9x1	4
14	Screw plug with seal M10x1	1
15	Square spirit level 10x10x30	1
16	Gearbox housing	1
17	Seal (Ø35xØ27,1x3)	2
18	Quick coupling G3/4"	2
19	Specially moulded sealing ring for coupling piece	3
20	Hexagon head screw M5x10	1
20A	Spring washer Ø5	1
21	Gear stick	1
22	Parallel pin Ø3x8	1
23	O-ring 26x3	1
24	Selector lever	1
25	Steel ball 5/32" (Ø3.969)	1
26	Compression spring	1
27	Spindle shaft	1
28	Water ring shaft sleeve (Ø28xØ26x9.5)	2
29	Rotary shaft seal TC 22x35x7	1
30	Spur gear Z45-M1.25	1
31	Circlip with constant cross-section Ø18	1
32	Pinion Z39-M1.25	1
33	Parallel key 5x5x40	1
34	Spur gear Z29-M1.25	1
35	Circlip with constant cross-section Ø14	1
36	Drawn cup needle HK1010	2
37	O-ring 87x2	1

No.	Designation	No.
52	Wind deflector	1
53	Hexagon head screw M4x85	2
53A	Washer Ø4xØ9x1	4
53B	M4 insulating sleeve	2
53C	Insulating washer	4
54	Stator complete (230V)	1
54A	Stator insulating sleeve	1
55	Deep groove ball bearing 6000Z	1
56	Magnetic ring, class 2 (Ø14xØ7x5.5)	1
57	O-ring 26x2	1
58	Carbon brush cover	2
59	Carbon brush	2
60	Carbon brush holder	2
61	Insulating disc	2
62	Motor housing	1
63	Grub screw with tapered tip M5x10	2
64	Mushroom head screw with hexa-gon socket M5x15	4
65	Phillips screw M4x6	1
65A	Serrated lock washers External serration M4	1
66	Temperature sensor cable	1
67	PCBA motor (230 V)	1
	Motor Plastic housing	1
68	Allen screw with hexagon socket M4x20	2
68A	Cheese head screw with hexagon socket M4x16	2
69	Yellow LED	1
70	Red LED	1
71	LED socket	2
72	Covering the rear of the engine	1
73	Allen screw with hexagon socket M5x20	2
74	Allen screw with hexagon socket M5x15	2
75	Cross-head tapping screw M4x25	3
76	Handle cover right	1
77	Switches	1
78	Switch cable	1
79	Cable clamp	1
80	Cross-head tapping screw M3.5x12	2
81	Handle cover left	1
82	Mains cable gland	1
83	Mains cable (230V / 3x1.5²)	1
84	PRCD (230V)	1

No.	Designation	No.
38	Parallel pin Ø4x8	1
39	Gearbox cover plate	1
40	Rotary shaft seal TC 12x24x7	1
41	Deep groove ball bearing 629Z	1
42	Ritzelwelle M1,25/Z24-M1,25/Z15-M1,25/Z8	1
43	Copper friction disc	3
44	Sleeve of the gear shaft	1
45	Helical gear M1/Z35/Clockwise rotating	1
46	Clutch disc	1
47	Disc spring	1
48	Hexagon nut M12x1.25 T=6	1
49	Shaft disc Ø28	1
50	Deep groove ball bearing 6001Z	1
51	Rotor complete (230V)	1

No.	Designation	No.
85	Mains plug (230V)	1
86	Anti-loss clamp	1
87	O-ring 32x1.5	2
88	Anti-loss disc	1
89	O-ring 49x1.5	1
90	Anti-loss base	1
91	Dust extraction coupling	1
92	O-ring 42x3.1	1
93	Quick disconnect coupling G1/2"	1
94	Washer for mounting BS/A12.7 (12.7x19x1.5)	2
95	Water valve switch	1
96	Water valve coupling	1
97	O-ring 16x3.1	1

9 EU Declaration of Conformity

The manufacturer/distributor

Kernlochbohrer GmbH
Geigersbühlweg 52
72663 Großbettlingen
Germany

hereby declares that the following product

Product description:	**Diamond Core drilling machine**
Type:	**DKB202/H-PRO | DKB202/P-PRO**

complies with all relevant provisions of the applicable legal regulations (hereinafter) - including their amendments valid at the time of the declaration. This declaration of conformity is issued under the sole responsibility of the manufacturer. This declaration relates only to the machine in the state in which it was placed on the market; parts and/or modifications subsequently fitted by the end user are not taken into account.

The following legal provisions were applied:

Machinery Directive 2006/42/EU (for delivery up to 19 January 2027)

Machinery Regulation (EU) 2023/1230 (for delivery from 20 January 2027)

Electromagnetic Compatibility Directive 2014/30/EU

The following harmonised standards were applied:

EN ISO 12100:2010

EN 62841-1:2015 + A11:2022

EN 62841-3-6:2014 +A12:2022

EN IEC 55014-1:2021

EN IEC 55014-2:2021

EN IEC 61000-3-2:2019 +A1:2021

EN 61000-3-3: 2013 +A2:2021

Name and address of the person authorised to compile the technical documentation:

Kernlochbohrer GmbH
Geigersbühlweg 52
72663 Großbettlingen
Germany

Großbettlingen 2026-08-28

Kernlochbohrer GmbH

Guido Pillat

Managing Director / Chief Executive Officer