KERNLOCHBOHRER®
PROFESSIONAL POWER TOOLS

# Operating instructions

# Soft impact core drilling machine

# SID202/H-Xtrem SID202/P-Xtrem

BA-01-000017-01-EN

Scope

These operating instructions apply only to the machine specified on the cover page.

Check the machine model against the machine's type plate.

Original manual / Translation of the original manual

The German version of these operating instructions is the original version, in accordance with the EU Machinery Directive.

Copies in other languages are translations of the original manual.

**Kernlochbohrer GmbH**

**Geigersbühlweg 52**

**72663 Großbettlingen**

**Germany**

**Telephone: +49 (0)70 22 / 50 34 900**

**Email: info@kernlochbohrer.com**

**Website: http://www.kernlochbohrer.com**

© Kernlochbohrer GmbH

This documentation is protected by copyright.

All rights to this documentation, in particular the rights of reproduction, distribution and translation, are held by Kernlochbohrer GmbH, including in the event of applications for intellectual property rights. No part of this documentation may be reproduced in any form or by any means, whether electronic or mechanical, or processed, duplicated or distributed using electronic systems, without the express written permission of Kernlochbohrer GmbH.

Subject to errors and technical changes.

Kernlochbohrer GmbH accepts no liability for any errors in this documentation. Liability for direct and indirect damages arising in connection with the supply or use of this documentation is excluded to the extent permitted by law. Furthermore, Kernlochbohrer GmbH cannot be held liable for damages resulting from the infringement of patents or other rights of third parties.

The machine's functionality is limited to the functions described in the accompanying technical documentation.

## Table of Contents

1 Information and Support ..... 6
1.1 A word of thanks to the purchaser ..... 6
1.2 Use of the operating instructions ..... 6
1.3 Changes ..... 6
1.4 Explanation of symbols ..... 7
1.5 Warranty ..... 7
1.6 Environmental protection ..... 7
1.6.1 Disposal of packaging ..... 7
1.6.2 Disposal of the product ..... 8
1.7 Service ..... 8
2 Safety ..... 9
2.1 General ..... 9
2.2 Intended use ..... 9
2.3 Safety regulations for the operator ..... 10
2.3.1 Organisational safety measures ..... 10
2.3.2 Modifications to the machine ..... 10
2.3.3 Spare parts ..... 11
2.3.4 Personnel ..... 11
2.4 Safety regulations for personnel ..... 12
2.4.1 Safe behaviour ..... 12
2.4.2 Safe operation ..... 12
2.4.3 Protective equipment ..... 14
2.5 Safety during maintenance ..... 15
2.5.1 General ..... 15
2.5.2 Cleaning ..... 15
3 Technical data ..... 16
4 Machine description ..... 17
4.1 Machine components ..... 17
4.2 Safety devices ..... 23
4.2.1 Backflow prevention ( function) ..... 23

4.2.2 Soft-start function ... 23
4.2.3 Mechanical overload protection ... 24
4.2.4 Electronic overload protection ... 24
4.2.5 Surge protection ... 25
4.2.6 Overheating protection ... 25
4.2.7 Monitoring by the control unit ... 25
4.3 Scope of delivery ... 26
5 Use of the machine ... 27
5.1 Specific precautions ... 27
5.2 Transporting the machine ... 28
5.3 Working with the machine ... 28
5.3.1 Visual inspection of the machine ... 28
5.3.2 Operating the machine in manual mode ... 29
5.3.3 Operating the machine on a core drilling rig ... 30
5.3.4 Fitting the core bit to a machine ... 31
5.3.5 Connect the machine to the water supply ... 32
5.3.6 Set up the machine’s dust extraction system. ... 33
5.3.7 Connect the machine to the mains supply ... 33
5.3.8 Using the machine ... 35
5.3.9 Switch off the machine ... 40
5.3.10 Storing the machine ... 40
6 Maintenance ... 41
6.1 Guidance on proper maintenance ... 41
6.2 Maintenance and inspection schedule ... 41
6.3 Inspection and maintenance ... 42
6.3.1 Cleaning and inspecting the machine ... 42
7 Troubleshooting ... 44
8 Spare parts ... 46
8.1 SID202/H-Xtrem ... 46
8.2 SID202/P-Xtrem ... 49
9 EU Declaration of Conformity ... 52

# 1 Information and Support

## 1.1 A word of thanks to the purchaser

Thank you very much for purchasing a machine from Kernlochbohrer GmbH.

Please read the operating instructions carefully and observe the safety instructions. By following the operating instructions, you will be able to make full use of our product's outstanding performance.

If you have any questions regarding the operation of the machine, please contact Kernlochbohrer GmbH directly. We are always available to answer your queries.

## 1.2 Use of the operating instructions

The machine is intended for professional use and must only be operated by trained personnel. Strictly adhere to the operating instructions.

Our company accepts no liability for any injuries or damage to the machine resulting from failure to follow the operating instructions.

The operating instructions are essential for the use of the machine. They must therefore always be kept near the machine and be accessible to authorised personnel at all times.

In addition to the operating instructions, the generally applicable and local regulations on accident prevention and environmental protection must be made available; compliance with these must be checked regularly.

## 1.3 Changes

Kernlochbohrer GmbH reserves the right to change the design and appearance of the products and their Operating instructions. Future changes to the Operating instructions will be made without prior notice.

## 1.4 Explanation of symbols

⚠ This symbol draws your attention to dangers that you must be aware of when carrying out the following tasks, in order to avoid injury to yourself, other people or damage to property.

📖 Cross-reference to another section in the operating instructions.

☑ Prerequisite for an action.

☒ Action to be carried out.

↳ Behaviour of the machine that can be expected as a result of the preceding action.

ⓘ Background information or a note on specific features.

## 1.5 Warranty

In accordance with the general terms and conditions of supply of Kernlochbohrer GmbH, a warranty period of 12 months applies to material defects in business dealings with other businesses (evidence to be provided by invoice or delivery note).

Damage attributable to natural wear and tear, overloading or improper handling is excluded from this warranty.

Damage caused by material or manufacturing defects will be rectified free of charge by repair or replacement. Claims can only be accepted if the equipment is sent to Kernlochbohrer GmbH in its unassembled state.

Wear parts are excluded from the warranty.

## 1.6 Environmental protection

### 1.6.1 Disposal of packaging

The packaging is made from recyclable materials. It must be disposed of in accordance with local authority guidelines, as indicated on the labelling.

### 1.6.2 Disposal of the product

Follow national regulations on the environmentally sound disposal and recycling of end-of-life machinery and accessories.

For EU countries only:

Do not dispose of the machine in household waste! In accordance with European Directive 2012/19/EU on waste electrical and electronic equipment and its transposition into national law, end-of-life power tools must be collected separately and sent for environmentally sound recycling.

## 1.7 Service

Providing precise details and specific questions enables rapid fault rectification, facilitates the ordering of spare parts and prevents incorrect deliveries.

Before contacting the service department, please first gather the following information.

The model designation must be provided for all enquiries and orders. You will find this information on the machine's type plate.

In the event of a fault, further details are required: the nature and extent of the fault, the circumstances surrounding it, and the suspected cause.

For spare parts orders, the following are required: quantity and part number as shown in the exploded view in the operating instructions.

ⓘ You are welcome to send us photos when ordering spare parts or videos in the event of faults.

Contact details:

Kernlochbohrer GmbH
Geigersbühlweg 52
72663 Großbettlingen
Germany
Telephone: +49 (0)70 22 / 50 34 900
Email: info@kernlochbohrer.com
Website: http://www.kernlochbohrer.com

# 2 Safety

## 2.1 General

The machine has been manufactured in accordance with the state of the art and in compliance with applicable laws, standards and safety regulations. Nevertheless, the use of the machine may still pose dangers to the user or third parties, as well as cause damage to the machine and other property.

The machine must only be used when in perfect working order, for its intended purpose, and with due regard for safety and potential hazards.

In the event of damage or malfunctions to the machine, switch it off immediately, secure it to prevent it from being switched on again, and repair it or arrange for it to be repaired.

## 2.2 Intended use

The machine is intended exclusively for drilling concrete, reinforced concrete, stone, masonry and similar materials using suitable drill bits, either wet or dry.

The machine can be operated either manually or with a core drilling rig. When used with a core drilling rig, a collet chuck with a clamping diameter of 60 mm is required.

Care must be taken to ensure that a drill bit suitable for the drilling technique and the material to be drilled is always used. To ensure the drill bit has the longest possible service life, the machine must be connected to a dust extraction system or a water supply.

The machine must only be used within the limits specified in its technical data. This information, such as performance specifications and environmental conditions, can be found in the ‘Technical Data’ section.

Any other use or use beyond these limits is considered improper – risk of accident! Kernlochbohrer GmbH accepts no liability for any resulting damage. The operator bears the sole risk. In order to determine, in the event of damage, whether the damage was caused by improper use, the machine continuously records instances of overload.

Proper use also includes observing the operating instructions and adhering to the prescribed maintenance intervals.

## 2.3 Safety regulations for the operator

### 2.3.1 Organisational safety measures

The operating instructions must be available at all times to operating and maintenance staff. They must therefore always be kept at the machine's place of use.

The regulations on accident prevention and environmental protection applicable at the machine's place of operation must also be available. The machine operator must regularly check compliance with these regulations.

The use of noise-emitting machinery may be subject to time restrictions under national or local regulations.

The machine must not be operated in potentially explosive atmospheres or in the vicinity of flammable liquids or gases, or flammable dust.

All safety and hazard warnings on the machine must be legible and must not be removed.

The operator must provide the protective equipment required for operating the machine. The operator must ensure that the protective equipment is used correctly by staff.

Operating and auxiliary materials, such as lubricants or cleaning agents, must be selected in such a way that the limit values for hazardous substances applicable at the site of use are complied with. The regulations applicable at the site of use regarding environmental protection and waste disposal must be complied with.

### 2.3.2 Modifications to the machine

The operator must not make any modifications to the machine without the written approval of Kernlochbohrer GmbH. If the operator carries out modifications without authorisation, the warranty shall lapse. Kernlochbohrer GmbH shall not be liable for damage caused by unauthorised modifications.

### 2.3.3 Spare parts

Spare parts must comply with the specifications defined by Kernlochbohrer GmbH. This is always guaranteed for spare parts supplied by Kernlochbohrer GmbH. Kernlochbohrer GmbH shall not be liable for damage resulting from the use of unsuitable spare parts.

### 2.3.4 Personnel

All persons tasked with commissioning, operating and maintaining the machine must have read and understood the operating instructions beforehand.

The machine must only be operated by persons who have received adequate training beforehand.

Maintenance of the machine must only be carried out by persons who have completed specialist training appropriate to this activity.

Minors must not work with the machine. This rule does not apply to young people over the age of 16 who are being trained under supervision.

## 2.4 Safety regulations for personnel

### 2.4.1 Safe behaviour

All persons responsible for commissioning, operating and maintaining the machine must have read and understood the operating instructions beforehand.

The machine must only be operated by persons who have received adequate training beforehand.

Maintenance of the machine must only be carried out by persons who have completed specialist training appropriate to this activity.

Minors must not work with the machine. This rule does not apply to young people over the age of 16 who are being trained under supervision.

Any working practice on or with the machine that compromises safety must be avoided.

All safety and hazard warnings on the machine must be legible and must not be removed.

### 2.4.2 Safe operation

Operating the machine requires the full concentration and alertness of the personnel. Persons who are overtired, distracted or under the influence of alcohol, drugs or medication must not operate the machine.

Persons who are not directly required for the operation of the machine must maintain a sufficient safety distance from it.

Check that the machine is in good working order before use. The machine must not be used if it is damaged. In such cases, secure the machine to prevent use and either repair it yourself or arrange for it to be repaired.

To avoid compromising the machine’s functionality and safety, covers or other components of the machine must not be removed.

Before starting or putting the machine into operation, ensure that no persons are at risk from the machine starting up.

Controls must not be operated carelessly or deliberately. This could result in personal injury or damage to the machine.

When using the machine, staff must ensure they have a secure footing and maintain an ergonomic posture.

If the machine is operated manually, it must always be held with both hands.

The machine must not be left unattended whilst in use.

Stopping the machine whilst it is running under a heavy load must be avoided. This could lead to damage due to overheating.

Air intake and outlet openings must not be covered during use.

The machine must not be exposed to rain or moisture and must never be submerged in water. Water ingress into the machine increases the risk of electric shock.

The machine must be cleaned regularly to prevent dirt from accumulating. All controls and handles must be kept clean, dry and free of grease.

When the machine is not in use, it must be parked in such a way that it does not pose a hazard to anyone. Secure the machine against unauthorised use.

### 2.4.3 Protective equipment

Persons using the machine are required to wear the following protective equipment:

- Safety goggles complying with standard EN 166 or a face shield.
- If the noise emissions generated whilst using the machine exceed the limit values applicable to this workplace, suitable hearing protection must be worn.

ⓘ In Germany, the following applies: From a daily noise exposure level of 85 dB(A) or a peak sound pressure level of 137 dB(C), the wearing of hearing protection is mandatory.

The generation of harmful drilling dust must be prevented by technical means (wet drilling or dry drilling with dust extraction). If this is not possible, operating personnel and bystanders must always wear a respirator approved for the material being worked on.

Wearing additional protective equipment reduces the risk of injury:

- Safety footwear with non-slip soles and toe caps.
- Cut-resistant gloves with a secure grip.
- Safety helmet

Loose-fitting clothing, long hair or body jewellery can get caught on moving parts of the machine!

Persons carrying out maintenance work on the machine are required to wear suitable protective equipment as necessary for this activity.

## 2.5 Safety during maintenance

### 2.5.1 General

Maintenance of the machine must only be carried out by persons who have completed specialist training appropriate to this activity.

The maintenance tasks and intervals specified in the operating instructions must be adhered to.

Workshop equipment appropriate to the type of work is required to carry out maintenance work.

Before commencing any maintenance work, the following safety precautions must be taken:

- Position the machine so that the area to be worked on is easily accessible.
- Set the machine to the appropriate operating mode.

After completion of maintenance work:

- Reassemble the machine completely.
- If any controls or safety devices have been removed, they must be refitted and their function checked.
- Retighten any loosened screw connections. Reapply threadlocker.

Persons carrying out maintenance work on the machine are required to wear suitable protective equipment as necessary for the task.

### 2.5.2 Cleaning

No corrosive, hazardous to health or environmentally harmful substances must be used to clean the machine. Dispose of cleaning agents in an environmentally responsible manner.

Under no circumstances must high-pressure washers, water jets or compressed air be used to clean the machine.

# 3 Technical data

| Type | SID202/H-Xtrem | SID202/P-Xtrem |
|---|---|---|
| Item number | 6191 | 6192 |
| Power consumption | 2600 W | |
| Voltage | 230 V ±5% / 50 Hz | |
| Current consumption | 14 A | |
| Spindle thread | 1 ¼” UNC & G ½” | |
| Chuck diameter | 60 mm | |
| | Speed 1 | Speed 2 |
| Speed | 700 rpm | 1550 rpm |
| Impact rate ① | 18,200 1/min | 40,300 1/min |
| Max. drilling diameter with Core drilling rig | 202 mm | 102 mm |
| Weight | 6.05 kg | |
| Permissible ambient temperature | 5°C to 40°C | |
| Permissible relative humidity | 30% to 80% | |
| Protection class | II | |
| Connector | Type F (CEE 7/4) | |
| Mains cable: Type \| Length | G-HPMCE 3x 1.5 mm² \| 3 m | |
| Vibration level | 6 m/s² | |
| Water/dust connection | GEKA®coupling 3/4” | |
| Water supply adapter | Gardena | |
| Dust extraction adapter | For hose Ø 35 mm | |
| Compatible core drilling rig | IDS252/V-PRO or TBS3000/PRO | |
| Case dimensions | 640 x 460 x 225 mm | |

① In soft-hammer drilling mode

# 4 Machine description

## 4.1 Machine components

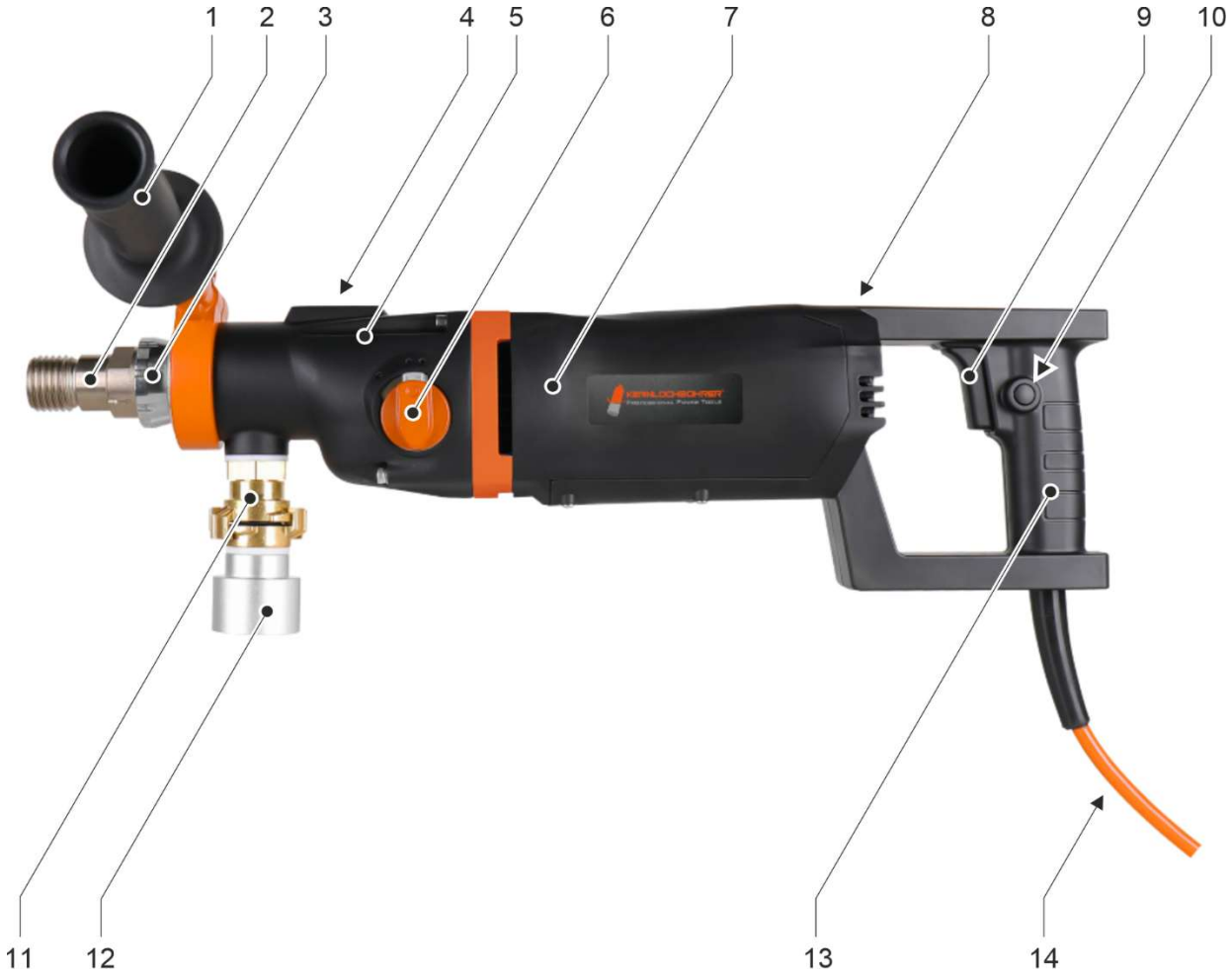

SID202/H-Xtrem: Machine components

1 Clamping collar handle
2 Drill spindle
3 Mode selector ring
4 Spirit level
5 Gearbox housing
6 Gear selector
7 Engine casing
8 LED indicators
9 Switches
10 Switch lock
11 Connection for water supply or dust extraction
12 Dust extraction adapter
13 Main handle
14 Mains cable with personal residual current device (PRCD)

1
2
3
4
5
6
7
8
9
10
11
12
13
14

SID202/P-Xtrem: Machine components

1 Clamping collar handle
2 Drill spindle
3 Mode selector ring
4 Spirit level
5 Gearbox housing
6 Gear selector
7 Engine casing
8 LED indicators
9 Connection for water supply or dust extraction
10 Dust extraction adapter
11 Switch
12 Switch lock
13 Main handle
14 Mains cable with personal residual current device (PRCD)

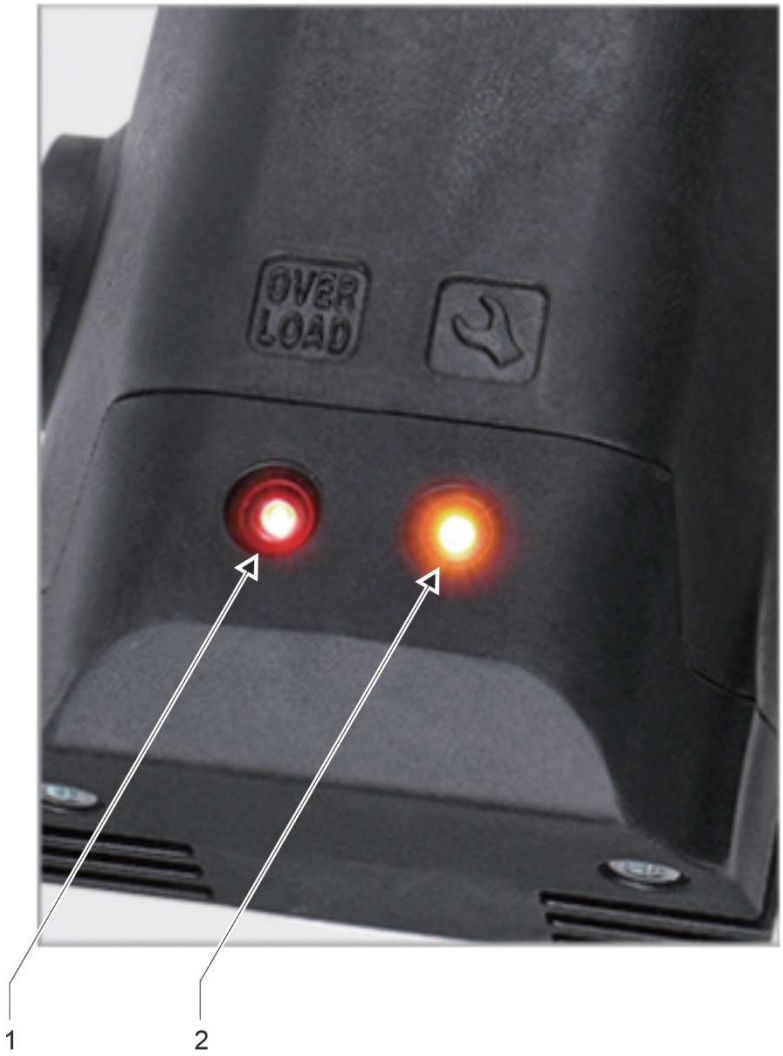


LED indicators on the top of the motor housing

1 ‘Overload’ LED

2 ‘🛠’ LED

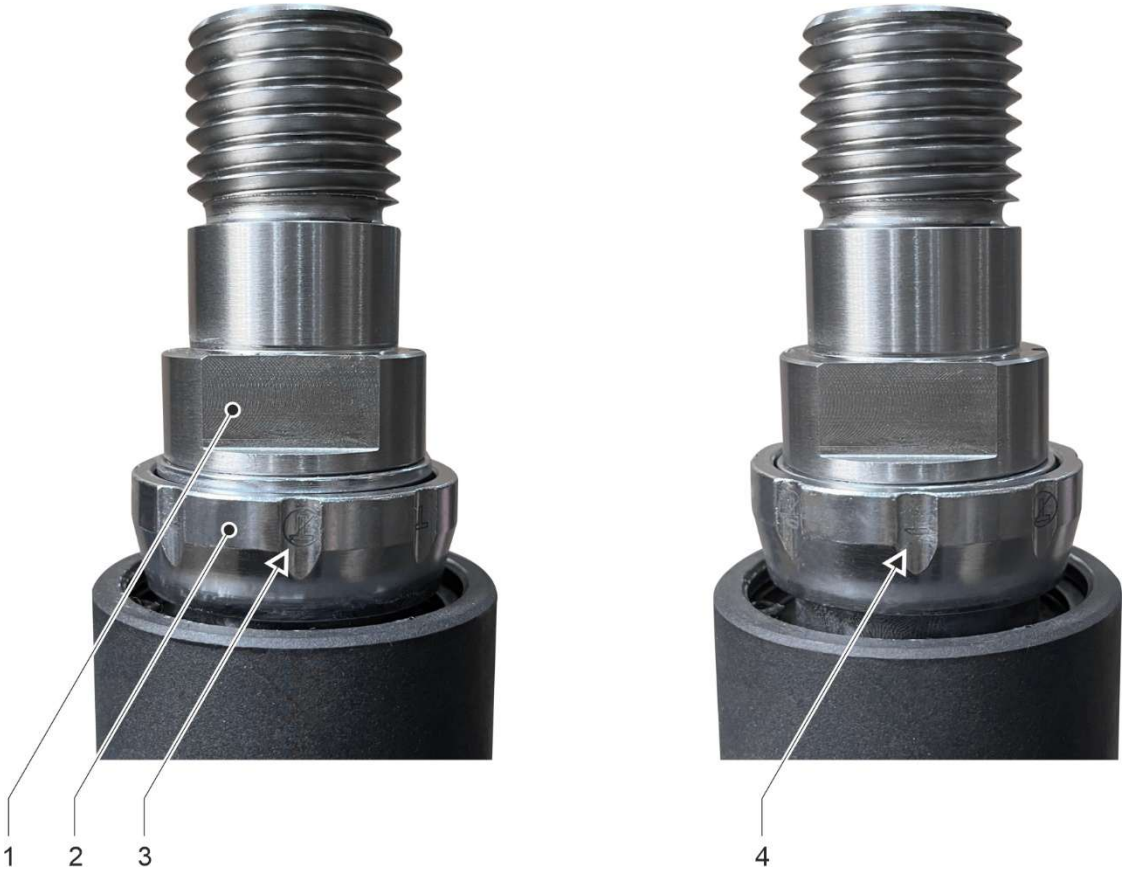


Drilling mode setting

1 Drill spindle

2 Mode selection ring

3 Normal drilling mode (icon )

4 Soft-hammer drilling mode (symbol )

Personal protection circuit breaker (PRCD)

## 4.2 Safety devices

### 4.2.1 Backflow prevention ( function)

The machine is equipped with a backflow prevention system (kickback function).

If the drill bit becomes jammed and generates a sudden reverse torque (kickback), or if the operator unexpectedly loses their grip, the system detects the loss of control and immediately cuts off the power supply. This significantly reduces the risk of the machine whipping out of control and injuring the operator or people nearby.

The backflow prevention is triggered under the following conditions:

- The machine's rotational speed about its longitudinal axis exceeds 240°/s.
- The machine's rotational speed about its longitudinal axis is between 120°/s and 240°/s, and the cumulative rotation exceeds 60°.

This function is designed for safety purposes, but does not replace correct operating techniques or personal protective equipment.

Do not deliberately trigger this function and do not rely on it when carrying out tasks that pose a danger.

### 4.2.2 Soft-start function

The machine is equipped with a soft-start function which, by gradually increasing speed and power, offers the following advantages:

- Reduced start-up load on the machine and the power supply.
- Better control of the machine and greater precision when starting the drilling process.
- Torque surges are reduced, making it safer and more comfortable for the user.
- A smooth start reduces the risk of cracks and fractures in the material.

### 4.2.3 Mechanical overload protection

This machine is fitted with a mechanical slip clutch to protect the operator and the machine from excessive torque forces. If the drill bit suddenly becomes jammed in the hole, the safety clutch engages and the drill spindle stops

The slip clutch must not be subjected to load for longer than 3 to 4 seconds. If the slip clutch engages during drilling, the feed pressure must be reduced immediately. Otherwise, the safety clutch may be damaged due to excessive wear. Once the drill bit has returned to its normal speed, drilling can resume.

Risk of injury!
A worn slip clutch must be replaced immediately at a specialist workshop.

### 4.2.4 Electronic overload protection

There are 2 LED indicators on the top of the motor housing.

If the machine is overloaded, the red LED labelled “Overload” will light up. This signals to the operator that the maximum current supply has been reached. The feed pressure must then be reduced immediately until the red LED goes out.

If the machine is operated in an overloaded state for a prolonged period, it will shut down automatically for its own protection and the red LED will remain lit continuously. This shutdown of the machine due to overload constitutes improper use, which may result in a restriction of the machine’s warranty.

After the machine has shut down due to overload, disconnect the machine from the mains and carry out the following checks:

- Is the drill bit jammed in the borehole?
- Is the gear selector locked in the correct position?
- Can the drill bit be rotated normally?

The machine can then be restarted.

### 4.2.5 Surge protection

The machine can withstand short-term voltage spikes of up to a maximum of 260 volts. Higher voltages can cause irreparable damage, so the machine will switch off to protect itself.

Please note that if the machine is powered by a generator, the maximum specified value must not be exceeded.

If the surge protection is triggered whilst the machine is in operation, the power supply must be checked and, if necessary, replaced.

### 4.2.6 Overheating protection

If the temperature of the machine's motor becomes too high, the built-in thermal protection switch is activated and the machine switches off to protect itself. At the same time, the yellow LED indicator labelled "🛠 " lights up.

If the overheating protection is triggered whilst the machine is in operation, the machine must not be restarted immediately. The machine must first be allowed to cool down for approximately 2 to 3 minutes.

### 4.2.7 Monitoring by the control unit

If, whilst the machine is in operation, the control unit detects problems such as overload, phase failure, a short circuit or even a fault between the rotor and stator, it will cut off the power supply.

## 4.3 Scope of delivery

The machine is supplied with the following components:

- SID202/H-Xtrem or SID202/P-Xtrem soft impact core drilling machine
- Clamping collar handle (with clamping diameter Ø 60 mm)
- Water supply adapter
- Dust extraction adapter
- Open-ended spanners, sizes 32 and 41
- Storage case
- Operating instructions

ⓘ Kernlochbohrer GmbH offers a comprehensive range of tools and accessories for the machine:

- Core drilling rig
- Core drill bits
- Adapters for drill bits
- Quick-change systems for drill bits
- Water collection rings

For further information and to place an order, please visit our online shop at http://www.kernlochbohrer.com.

# 5 Use of the machine

## 5.1 Specific precautions

Risk of injury!

When the machine is in operation, people must always keep a safe distance.

Rotating parts of the machine, as well as falling or flying particles, can cause injury.

DANGER of electric shock!

The machine does not have the appropriate protection rating and must therefore not be operated in the rain or in wet rooms (e.g. bathrooms or utility rooms).

Only core bits with sharp, undamaged cutting segments must be used. Sharp core bits are less likely to jam during drilling and are easier to guide.

When using the machine for vertical drilling upwards, a fully functional water collection ring must be used. No water must come into contact with the machine.

Before starting the drilling operation, the intended exit point of the drill bit must be inspected. The exit point must be secured and cordoned off. It must be ensured that the emerging drill bit does not cause any personal injury or damage to property.

Should a fault occur whilst the machine is in operation (e.g. a smell of burning), switch off the machine immediately and disconnect the mains cable from the power supply. Failure to do so could result in a fire, electric shock or other incidents. The machine must not be switched on again until the fault has been rectified and the machine’s proper functioning has been confirmed.

## 5.2 Transporting the machine

Before transporting the machine:

- Switch off the machine.
- Unplug the power cable from the socket.
- Disconnect the water supply or dust extraction system.

## 5.3 Working with the machine

### 5.3.1 Visual inspection of the machine

Before working with the machine, carry out a visual inspection:

- Check the general condition and cleanliness of the machine.
- Check that all covers and components of the machine are present.
- Check that all screws are tight.
- Air intake and outlet openings must not be dirty or obstructed.
- The mains cable and plug must not be damaged.

### 5.3.2 Operating the machine in manual mode

The machine can be operated manually or mounted on a Core drilling rig.

If the machine is used in handheld mode, the supplied clamping collar handle with a clamping diameter of Ø 60 mm must be fitted to the machine's clamping collar.

Only use the machine in handheld mode with the clamping collar handle fitted!

Always hold the machine firmly with both hands during drilling!

<u>Procedure:</u>

☑ The machine is not connected to the mains.

☑ Carry out a visual inspection of the machine.

🕮 See chapter 5.3.1 "Visual inspection of the machine".

☒ Fit the clamping collar handle to the machine's clamping collar.

### 5.3.3 Operating the machine on a core drilling rig

The machine can be operated manually or on a Core drilling rig.

If the machine is operated on a core drilling rig, it must be secured to the rig using a clamping holder with a diameter of Ø 60 mm.

ⓘ The core drilling rig may need to be purchased separately.
Kernlochbohrer GmbH offers a comprehensive range of tools and accessories for the machine. For further information and to place an order, please visit the online shop at http://www.kernlochbohrer.com.

Before working with the machine, the core drilling rig must be secured at the drilling position.

The machine must not be secured to the Core drilling rig at this stage.

🕮 For information on securing the core drilling rig, please refer to its operating instructions.

Procedure:

☑ The machine is not connected to the mains supply.

☑ Carry out a visual inspection of the machine.

🕮 See chapter 5.3.1 “Visual inspection of the machine”.

☑ Secure the core drilling rig at the drilling position and align it.

☒ Mount the machine on the core drilling rig.

ⓘ The machine is secured to the core drilling rig using a clamping holder with a diameter of Ø 60 mm. This fixing material is included with the core drilling rig.

🕮 For information on mounting the machine on the Core drilling rig, please refer to the operating instructions for the rig.

### 5.3.4 Fitting the core bit to a machine

A core bit is a cylindrical tool fitted with brazed or laser-welded cutting segments.

To fit the drill bit to the machine, the drill spindle is fitted with a 1 ¼” UNC external thread and a G ½” internal thread.

ⓘ Adapters are available for drill bits with different thread sizes.

ⓘ To prevent corrosion and to facilitate removal of the drill bit, a water-resistant grease can be applied to both threads prior to fitting.

ⓘ A quick-change system can be used for the quick and easy replacement of drill bits.

Alternatively, a copper ring can be used to facilitate the removal of the drill bit from the drill spindle.

⚠ Risk of injury from the sharp-edged cutting segments of the drill bit!

Wear cut-resistant gloves!

Tools:

Water-resistant grease

Open-ended spanner with jaw widths SW 32 and SW 41

Procedure:

☑ The machine is not connected to the mains.

☑ Carry out a visual inspection of the machine.

📖 See chapter 5.3.1 “Visual inspection of the machine”.

☑ If the machine is to be used with a core drilling rig:

Secure the core drilling rig at the drilling position, align it, and attach the machine to the core drilling rig.

📖 See the chapter 5.3.3 “Operating the machine on a core drilling rig”.

☒ Screw the core bit onto the machine's drill spindle and tighten it hand-tight.

☒ Tighten the drill bit using a SW41 open-ended spanner , whilst holding the machine's drill spindle in place with a SW32 open-ended spanner.

☒ Remove the open-ended spanner from the drill bit and the drill spindle.

### 5.3.5 Connect the machine to the water supply

ⓘ The machine can be used for either wet or dry drilling.

In wet drilling, the water serves to cool the drill bit so that it does not overheat during drilling, which would cause increased wear.

ⓘ Only clean water must be used.

Only clean and dust-free hoses and couplings must be used.

The maximum water pressure must not exceed 3 bar.

ⓘ When using the machine for wet drilling, we recommend using an additional water collection ring to protect the machine and the working environment.

Kernlochbohrer GmbH offers a comprehensive range of tools and accessories for the machine. For further information and to place an order, please visit the online shop at http://www.kernlochbohrer.com.

Procedure:

☒ Connect the water supply to the machine's connection point.

☒ Close the ball valve on the water connection (turn it to the cross position).

☒ Connect the machine's water connection to a water hose.

### 5.3.6 Set up the machine's dust extraction system.

ⓘ The machine can be used for either wet or dry drilling.

When using the dry drilling method, the resulting drill dust must be extracted using a suitable industrial vacuum cleaner.

Procedure:

☒ Attach the dust extraction hose to the connection point on the machine.

☒ Connect the industrial vacuum cleaner to the dust extraction connection.

### 5.3.7 Connect the machine to the mains supply

Please note the following points:

- Observe the machine's electrical rating.
  🕮 See the chapter 3 'Technical data'.
- Before connecting the machine to the mains, ensure that the machine is switched off.
- The mains cable and mains plug must not be damaged.
- Have a damaged mains plug replaced only by Kernlochbohrer GmbH or a qualified electrician.
- The machine is fitted with a type F (CEE 7/4) mains plug. The machine must only be operated from a protective earth socket (CEE 7/3) that is properly earthed.
- To protect the operator and reduce the risk of electric shock, the machine has been fitted with a residual current device (RCD) integrated into the power cable. The machine must only be connected to the mains using this residual current device.
- After plugging the mains plug into the socket, the residual current device must be subjected to a test run. If the residual current device does not trip during this test, the machine must be disconnected from the mains and inspected by a qualified electrician.
- Never touch the mains plug with wet hands.
- The mains plug and socket must be clean and free of dust.
- The supply voltage must not deviate by more than 5% from the rated value. Excessive voltages can cause irreparable damage to the machine.

- When operating the core drilling machine with a generator, voltage spikes must not occur.
- When using extension cables, the cable cross-section must be suitable for the machine's power consumption.
- When using a cable reel, the cable must always be fully unwound.
- If the machine is used outdoors with an extension lead, the extension lead must be approved for outdoor use.
- To remove the mains cable from the socket, grip the mains plug. Do not pull on the mains cable.
- Do not use the power cable to pull or carry the machine, and keep it away from heat, solvents and oils, sharp edges and moving parts.
- If the machine is not to be used for an extended period, switch it off and remove the plug from the socket.

### 5.3.8 Using the machine

Before starting or putting the machine into operation, ensure that any tools used to fit the drill bit have been removed from the drill spindle.

Only use the machine in manual mode with the clamping collar handle fitted!

Always hold the machine firmly with both hands whilst drilling!

Tools required:

Open-ended spanner with a jaw width of SW 32

Procedure:

☑ Visual inspection of the machine carried out.

☑ When using the machine in manual mode:
Attach the clamping collar handle to the machine.
🕮 See chapter 5.3.2 “Operating the machine in manual mode”.

☑ When using the machine with a core drilling rig:
The machine is secured to the core drilling rig.
🕮 See the chapter 5.3.3 “Operating the machine on a core drilling rig”.

☑ Drill bit fitted to the machine.
🕮 See the chapter 5.3.4 “Fitting the core bit to a machine”.

☑ Ensure the machine is connected to the water supply or dust extraction system.
🕮 See the section 5.3.5 “Connect the machine to the water supply” or the section 5.3.6 “Set up the machine’s dust extraction system.“.

☑ The machine has been connected to the mains.
🕮 See the section 5.3.7 “Connect the machine to the mains supply “.

☒ Set the desired drilling mode on the mode selector ring on the machine's spindle:

- ☒ Press the mode selector ring in the direction of the arrow on the spindle.
- ☒ Set the desired drilling mode by turning the mode selector ring:
  - Normal drilling mode
  - Soft-hammer drilling mode
- ⓘ The soft-hammer function is recommended when the machine is to be used for dry drilling.

☒ Set the desired speed on the machine's speed selector switch according to the drill bit diameter.

- 🕮 See the chapter 3 'Technical data'.
- ⓘ The specified drilling diameters and speeds of the machine are based on an average concrete hardness.

  For reinforced concrete, select a lower gear to reduce the speed.
- ⓘ The gear selector switch must only be operated when the machine is switched off.

  Press the release button, turn the gear selector switch and allow it to click into the desired position.

  If the gear selector switch is stiff, gently turn the drill spindle with an open-ended spanner (switch size SW 32) to enable gear selection.

- ☒ Carry out a functional test of the personal protection switch (PRCD):
  - ☒ Hold the personal protection switch in your hand and press the 'TEST' button with your bare finger. Do not use gloves or any other insulating objects.
  - ↳ As soon as the personal protection switch is switched on, the electronics check whether the protective conductor (PE) is free of mains voltage.
  - ☒ Switch off the residual current device by pressing the 'RESET' button.
  - ☒ Switch the residual current device back on by pressing the 'TEST' button.
  - ↳ The machine should now operate normally.

  ⚠ If the personal protection switch does not trip or if it repeatedly switches off when the machine is switched on, the entire assembly must be checked by a qualified electrician.

  Use of the machine in this condition is not permitted!
- ☒ Switch on the machine at the switch and let it run briefly: whilst doing so, check the concentricity of the drill bit.
- ☒ Switch on the machine at the switch without a load.

  ⓘ The switch lock allows the machine to be operated without having to operate the switch manually.
- ☒ If the machine is to be used for dry drilling:
  - ☒ Switch on the vacuum cleaner.
  - ☒ Once the vacuum cleaner has reached maximum suction: Exercise caution when beginning to drill.
- ☒ If the machine is to be used for wet drilling:
  - ☒ Open the ball valve on the water connection
  - ☒ Once water is flowing continuously from the centre of the drill bit: Exercise caution when starting to drill.
- ☒ If the machine is to be used in manual mode:
  - ☒ Start the drilling process with an initial cut by not placing the full cutting surface of the drill bit against the surface: position the machine at an angle so that the surface is drilled with a V-shaped notch.
  - ☒ As soon as a V-notch has been made in the surface: align the machine and drill bit perpendicular to the surface and increase the feed pressure.

☒ Once the cutting depth has reached 10 mm, the feed pressure can be increased.

ⓘ Drilling at too high a speed or with too much feed pressure can cause the drill bit to jam.

☒ Keep a close eye on the LED indicators on the top of the motor housing during the drilling process:

If the red ‘Overload’ LED lights up: reduce the feed pressure immediately.

☒ Monitor the machine’s speed continuously during the drilling process:

If the speed drops, reduce the feed pressure.

☒ If the machine is being used for wet drilling:

If the feed rate slows down whilst the feed pressure remains the same, and the water emerging from the borehole becomes clearer but is mixed with metal chips, the drill bit has struck reinforcing steel.

Reduce the feed pressure until the reinforcing bar is cut through.

☒ When the machine is being used in wet drilling mode:

Dust and particles generated during drilling can block the water supply system. If the volume of water supplied to the drill bit is too low:

Check the water supply system and clean it if necessary.

☒ When cutting through wooden beams, thick asphalt or bitumen, the machine’s power consumption increases. In this case, reduce the feed pressure.

☒ If drilling needs to be carried out deeper than the effective length of the drill bit allows, an optional drill extension can be used.

☒ Monitor the machine continuously during the drilling process:

If light smoke is produced or the smell of an overloaded electric motor is detected, relieve the load on the machine and withdraw it from the borehole.

Then resume drilling slowly and with caution.

☒ When the end of the through-hole is almost reached:

Reduce the feed pressure until the drill bit emerges on the opposite side.

Core release function:

ⓘ The machine is equipped with a core release function to release a drill core that is stuck in the drill bit.

☒ Switch off the machine's motor at the switch.

☒ If the machine has been used for dry drilling:
Switch off the vacuum cleaner.

☒ Hold the machine so that the drill bit is pointing downwards.

⚠ Hold the machine so that a drill core falling out cannot injure anyone or damage any objects.

☒ Press the machine's switch three times in quick succession.

↳ The core release function is activated.
As this happens, the machine's drill spindle performs a brief back-and-forth movement to loosen the drill core within the drill bit.

ⓘ The core release function stops automatically after eight seconds.
The core release function can also be stopped by pressing the switch again.

⚠ Do not activate the core release function more than three times in succession!

Excessive use can cause the motor to overheat, shortening its service life or, in severe cases, causing damage to the motor!

### 5.3.9 Switch off the machine

Procedure:

☒ Switch off the machine's motor at the switch.

☒ Close the ball valve and disconnect the water supply.
Or:
Switch off the vacuum cleaner and disconnect the dust extraction system.

☒ Remove the mains plug from the socket.

☒ If necessary, remove the machine from the Core drilling rig.

☒ Remove the drill bit from the machine.

☒ Check the machine for dirt.
Clean the machine if necessary.
🕮 See the chapter 6.3.1 "Cleaning and inspecting the machine".

### 5.3.10 Storing the machine

Procedure:

☑ Machine switched off.
🕮 See the chapter 5.3.9 "Switch off the machine".

☒ Clean the machine and allow it to dry completely.
🕮 See the chapter 6.3.1 "Cleaning and inspecting the machine".

☒ Store the machine in a dry, cool place, protected from moisture and direct sunlight.

☒ Secure the machine against unauthorised use.

# 6 Maintenance

## 6.1 Guidance on proper maintenance

Inadequate or improper maintenance can cause operational faults and impair the machine's operational safety and service life. Regular inspection and maintenance are therefore essential. We recommend that maintenance work be carried out only by trained personnel.

The contractually agreed warranty does not release the machine operator from the obligation to maintain the machine in accordance with the manufacturer's instructions from the time of commissioning. Kernlochbohrer GmbH accepts no liability for damage caused by a lack of maintenance.

## 6.2 Maintenance and inspection schedule

The maintenance intervals specified apply to normal operating conditions. In the event of more demanding conditions (heavy dust accumulation, etc.) and longer daily working hours, the operator must shorten the specified intervals accordingly.

Please use the maintenance and inspection schedule as a guide only! It is essential that you follow the cross-references to the other chapters! These describe in detail how to carry out the individual tasks correctly and safely.

| Interval | Category | Component | Task | Chapter |
|---|---|---|---|---|
| 1 day | Real-time | Machine | Cleaning and testing | 6.3.1 |

## 6.3 Inspection and maintenance

### 6.3.1 Cleaning and inspecting the machine

Do not use abrasive sponges or metal objects to clean the machine. These could damage the machine's surface.

Do not use high-pressure washers, water jets or compressed air to clean the machine. The force of the water or air jet could damage the machine.

Do not use any corrosive, hazardous or environmentally harmful substances to clean the machine.

Interval:

1 day in real time

Tools:

- A container with a mixture of water and a mild cleaning agent (e.g. washing-up liquid).
- Cloth and brush
- Water-resistant grease

Procedure:

☑ Switch off the machine and unplug the mains plug from the socket.

📖 See the chapter 5.3.9 'Switch off the machine'.

☒ Clean the machine to remove dust and dirt.

- To do this, use a damp cloth dipped in water mixed with a mild detergent.
- No water must enter the machine via the air inlet and outlet openings.

☒ Clean the air inlet and outlet openings with a brush and a damp cloth.

☒ Allow the machine to dry completely.

☒ Check that all screws and nuts on the machine are secure. Tighten any screws and nuts if necessary.

- ☒ Check the condition and effectiveness of the water seals. Replace any damaged or worn water seals.
- ☒ Check the gearbox housing for oil leaks. If oil is leaking from the gearbox, contact Kernlochbohrer GmbH.
- ☒ Check the mains plug and power cable for damage. Have any damaged parts replaced by a qualified electrician.
- ☒ Carry out a test run of the personal residual current device (PRCD). If the PRCD does not trip during the test run, have the unit checked by a qualified electrician.
- ☒ Lightly coat the external thread of the machine's drill spindle with water-resistant grease.

# 7 Troubleshooting

Should a fault occur whilst the machine is in operation, please first try to rectify the fault yourself using the information below.

If you are unable to resolve the fault yourself, please contact Kernlochbohrer GmbH.

| Fault | Possible cause | Troubleshooting |
|---|---|---|
| Machine will not start | Power supply interrupted | Plug in another electrical appliance to check that the power supply is working |
| | Mains plug not properly inserted. | Plug the mains plug in correctly |
| | Personal protection switch has not been reset | Press the reset button on the personal safety switch |
| | Loose connection on the personal safety switch | Have the personal safety switch replaced by a qualified electrician |
| | Power cable or switch damaged | Have the mains cable or switch replaced by a qualified electrician |
| | Damaged rotor or stator | Have it checked by a qualified electrician and replaced if necessary |
| Leak in the water seals | Water seals worn | Replace the water seals |

| Fault | Possible cause | Troubleshooting |
|---|---|---|
| Drill bit is stuck or jammed | The gear is not properly engaged | Turn the gear selector to the desired gear and allow it to engage |
| | Slip clutch worn | Have the slip clutch replaced |
| | High steel content in the concrete or very hard material | After switching off the machine, adjust the position of the drill bit slightly using a spanner and tap the drill bit's shank carefully and gently with a wooden hammer handle until the stuck drill core comes loose. Slowly pull out the drill bit and restart the machine with CAUTION |
| | Damaged gearbox | Have the gearbox replaced |
| Drilling speed too slow | End of the drill bit's service life reached or cutting segments broken off | Check the drill bit and replace if necessary |
| | Too much coolant leads to inefficient cutting by the cutting segments | Reduce the water flow |
| | Drill bit is blunt | Resharpen the cutting segments |
| | High steel content in the concrete or very hard material | Reduce the feed pressure to cut through steel or hard material. Increase it again afterwards |
| | Drilling angle misaligned | Readjust the drilling angle so that the drill bit is perpendicular to the cutting surface |
| Drill spindle wobbles | Drill spindle is worn | Have the drill spindle replaced |

# 8 Spare parts

## 8.1 SID202/H-Xtrem

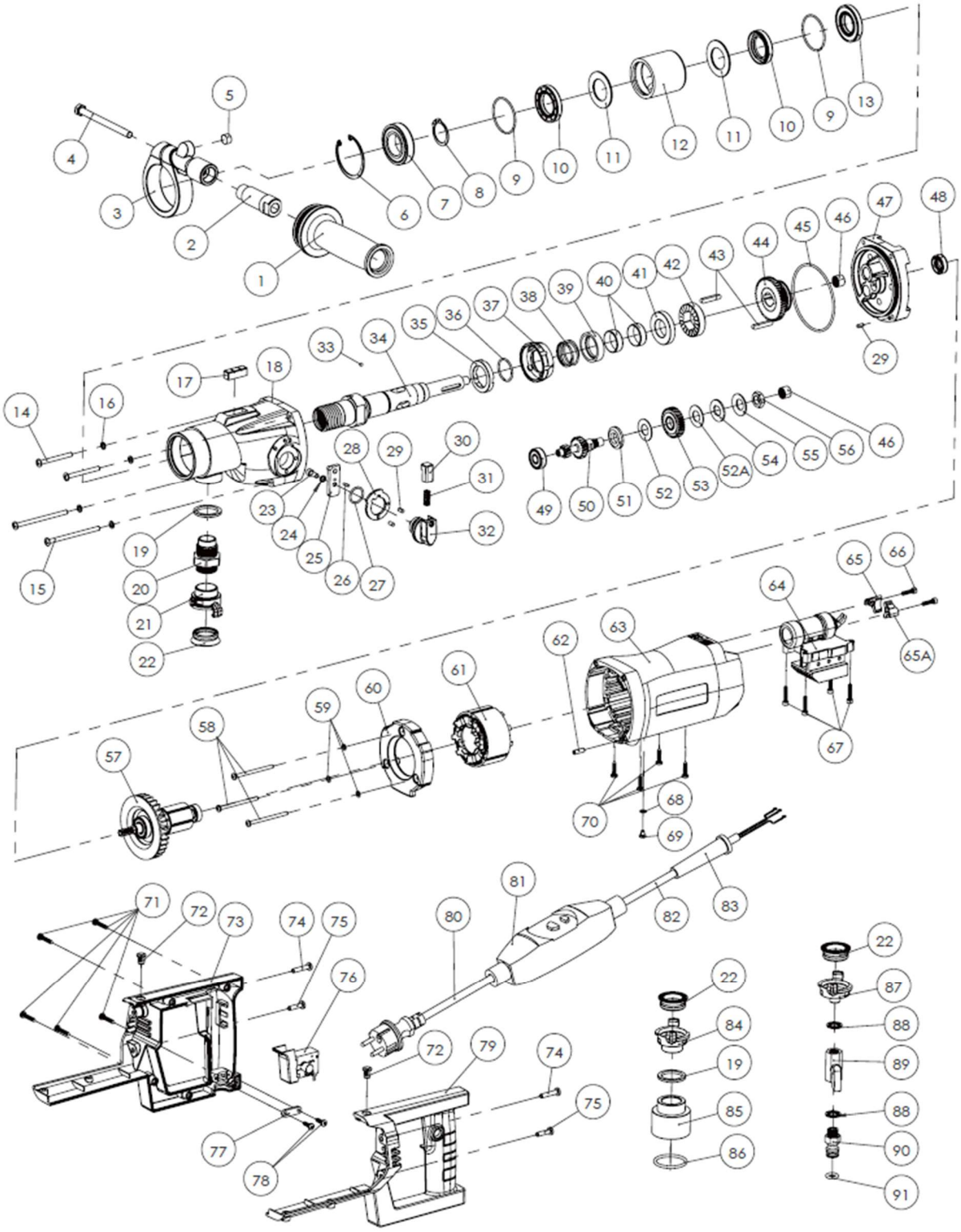

| No. | Description | Qty |
|---|---|---|
| 1 | Plastic-handled screw M14x55 | 1 |
| 2 | Connecting rod for front handle | 1 |
| 3 | Clamping head for front handle | 1 |
| 4 | Hexagon bolt M8x100 | 1 |
| 5 | Dragonfly Ø12x6 | 1 |
| 6 | Holwith ring Ø52, small tab | 1 |
| 7 | Deep-groove ball bearing 60 / 28 | 1 |
| 8 | Shaft with stop ring Ø28 | 1 |
| 9 | Wire clamping spring Ø45xØ2 | 2 |
| 10 | Dust-proof oil seal TC 28x43x7 | 2 |
| 11 | Water ring washer Ø43xØ28.2x2 | 2 |
| 12 | Water-ring socket | 1 |
| 13 | Dust-proof oil seal TC 25x47x7 | 1 |
| 14 | M5x50 hexagon socket mushroom head screw | 2 |
| 15 | M5x80 hexagon socket mushroom head screw | 2 |
| 16 | Flat washer for Ø5x Ø9x1 | 4 |
| 17 | Square spirit level 10x10x30 | 1 |
| 18 | Gearbox | 1 |
| 19 | Sealing washer (Ø34.8 × Ø26.1 × 3.5) | 2 |
| 20 | G3/4" connection screw | 1 |
| 21 | G3/4” quick-connect coupling | 1 |
| 22 | Quick-release coupling | 3 |
| 23 | M5x12 hexagon socket cylinder head bolt | 1 |
| 24 | Stainless steel Bulppad Ø5 | 5 |
| 25 | Shift fork | 1 |
| 26 | Cylindrical pin Ø3x8 | 1 |
| 27 | O-ring Ø22x2) | 1 |
| 28 | Flat button washer | 1 |
| 29 | Cylinder pin Ø4x8 | 3 |
| 30 | Knob-end push pin | 4 |
| 31 | Spring Ø5x0.6x35 | 1 |
| 32 | Gear selector knob | 1 |
| 33 | Steel ball 5/32" (Ø3.969) | |
| 34 | Output shaft | 4 |
| 35 | Impact ring gear | 4 |

| No. | Description | Quan-tity |
|---|---|---|
| 48 | Dust-proof oil seal TC 12x24x7 | 1 |
| 49 | Deep-groove ball bearing 629Z | 1 |
| 50 | Pinion shaft Z15-Z8 | 1 |
| 51 | Friction disc | 1 |
| 52 | Copper friction disc 2 mm | 1 |
| 52A | Copper friction disc 1 mm | 1 |
| 53 | Bevel gear Z34 M1 | 1 |
| 54 | Waist clamp | 1 |
| 55 | Disc spring | 1 |
| 56 | Hex nut M12x1.25 T=6 | 1 |
| 57 | Brushless rotor (230 V) | 1 |
| 58 | Phillips-head flat-head screw M4x65 | 3 |
| 59 | Flat washer 4.2 | 3 |
| 60 | Air damper | 1 |
| 61 | Stator (230 V) | |
| 62 | Ball-head tappet M5x16x2x3 | 1 |
| 63 | Motor housing | 1 |
| 64 | Motor control board 230V/50–60Hz | 1 |
| 65 | Capacitor holder (right) | 1 |
| 65A | Capacitor holder (left) | 1 |
| 66 | M4x16 hexagon socket cylinder head bolt | 2 |
| 67 | M4x20 hexagon socket cylinder head bolt | 4 |
| 68 | M4 external toothed washer | 1 |
| 69 | Half-head screw with cross-recess, M4x6 | 1 |
| 70 | Self-tapping screw with cross-re-cessed head, M4x20 | 4 |
| 71 | Self-tapping screw with cross-re-cess, head, tip and shank, M4x25, 304 stainless steel | 5 |
| 72 | LED socket | 2 |
| 73 | Right-hand cover for handle type D | 1 |
| 74 | Self-tapping screw with cross-head and round head, M5x25 | 2 |
| 75 | Self-tapping screw with cross-head and round head, M5x20 | 2 |
| 76 | Release switch | 1 |
| 77 | Pressure wire plate | 1 |
| 78 | Self-tapping screw with cross-head and round head, M4x16 | 2 |
| 79 | Type D handle, left-hand cover | 1 |
| 80 | Mains plug (230 V) (230 V/3 × 1.5²) | 1 |

| No. | Description | Qty |
|---|---|---|
| 36 | Wire spring Ø28 | 1 |
| 37 | Lever handle | 1 |
| 38 | Tension spring 2.0 × 32.1 × 11.5 | 1 |
| 39 | Spring-loaded disconnect socket | 1 |
| 40 | Water ring sleeve Ø28 x Ø26 x 9.5 | 2 |
| 41 | Impact bit Z26 0.7 mm | 1 |
| 42 | Tapered thread cutter Z26 0.7 mm | 1 |
| 43 | Flat composite 5×5×30 | 2 |
| 44 | Sliding rotary knob, toothed Z45-Z38 | 1 |
| 45 | O-ring seal Ø85x2.5 | 1 |
| 46 | Punching of the outer ring of the HK1010 needle roller bearing | 2 |
| 47 | Middle cover | 1 |

| No. | Description | Quan-tity |
|---|---|---|
| 81 | Portable residual current circuit breaker (PRCD) (230 V) | 1 |
| 82 | Mains cable (230 V/3 × 1.5²) | 1 |
| 83 | Cover for earth wire | 1 |
| 84 | G3/4" quick-connect coupling | 1 |
| 85 | Dust extraction coupling | 1 |
| 86 | O-ring 42 × 4.0 | 1 |
| 87 | G1/4 quick-connect coupling / external thread, copper | 1 |
| 88 | Combination flat gasket BS/A12.7 (12.7 × 19 × 1.5) | 2 |
| 89 | Water valve switch (mini valve) G1/4″ 1/4 internal thread, made of chrome-plated copper | 1 |
| 90 | Water valve connector G1/4” | 1 |
| 91 | O-ring Ø16x3.1 | 1 |

## 8.2 SID202/P-Xtrem

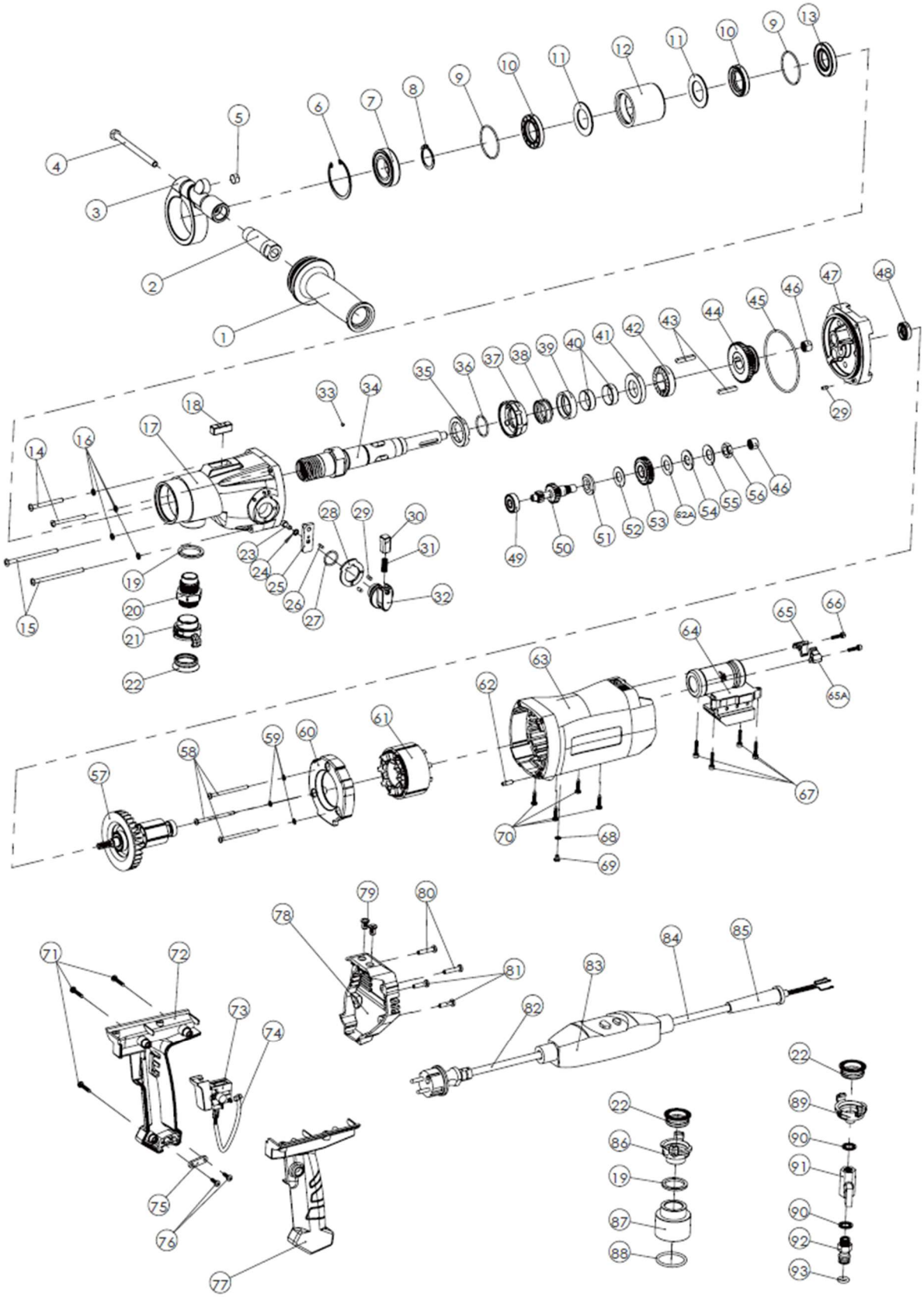

| No. | Description | Qty |
|---|---|---|
| 1 | Plastic-handled screw M14x55 | 1 |
| 2 | Connecting rod for front handle | 1 |
| 3 | Clamping head for front handle | 1 |
| 4 | Hexagon bolt M8x100 | 1 |
| 5 | Spirit level Ø12x6 | 1 |
| 6 | Holwith ring Ø52, small tab | 1 |
| 7 | Deep-groove ball bearing 60/28 | 1 |
| 8 | Shaft with stop ring, Ø28 | 1 |
| 9 | Wire clamping spring Ø45 x Ø2 | 2 |
| 10 | Dust-proof oil seal TC 28x43 x7 | 2 |
| 11 | Water ring washer Ø43xØ28.2x2 | 2 |
| 12 | Water ring bushing | 1 |
| 13 | Dust-proof oil seal TC 25x47x7 | 1 |
| 14 | M5x50 hexagon socket mushroom head screw | 2 |
| 15 | M5x80 hexagon socket mushroom head screw | 2 |
| 16 | Washer for Ø5xØ9x1 | 4 |
| 17 | Gearbox | 1 |
| 18 | Square spirit level 10x10x30 | 1 |
| 19 | Sealing washer (Ø34.8 x Ø26.1 x 3.5) | 2 |
| 20 | G3/4" connection screw | 1 |
| 21 | G3/4" quick-connect coupling | 1 |
| 22 | Quick-release coupling | 3 |
| 23 | M5x12 hexagon socket head cap screw | 1 |
| 24 | Sealing washer Ø5 | 5 |
| 25 | Shift fork | 1 |
| 26 | Cylindrical pin Ø3x8 | 1 |
| 27 | O-ring Ø22x2 | 1 |
| 28 | Washer for rotary knob | 1 |
| 29 | Cylinder pin Ø4x8 | 3 |
| 30 | Push pin for rotary knob | 1 |
| 31 | Spring Ø5x0.6x35 | 1 |
| 32 | Adjustment knob for gearbox | 1 |
| 33 | Steel ball 5/32" (Ø3.969) | 1 |
| 34 | Output shaft | 1 |
| 35 | Impact gear ring | 1 |
| 36 | Wire spring Ø28 | 1 |
| 37 | Impact handle | 1 |

| No. | Description | Quan-tity |
|---|---|---|
| 49 | Deep-groove ball bearing 629Z | 1 |
| 50 | Sprocket shaft Z15-Z8 | 1 |
| 51 | Friction disc | 1 |
| 52 | Copper friction washer 2 mm | 1 |
| 52A | Copper friction disc 1 mm | 1 |
| 53 | Bevel gear Z34 M1 | 1 |
| 54 | Waist clip | 1 |
| 55 | Disc spring | 1 |
| 56 | External hexagon nut M12x1.25, T=6 | 1 |
| 57 | Brushless rotor (230 V) | 1 |
| 58 | Flat-head Phillips screw M4x65 | 3 |
| 59 | Flat washer 4.2 | 3 |
| 60 | Air damper | 1 |
| 61 | Stator assembly (230 V) | 1 |
| 62 | M5x16x2x3 ball-head tappet | 1 |
| 63 | Motor housing | 1 |
| 64 | Motor control board 230V/50–60Hz | 1 |
| 65 | Condenser holder (right) | 1 |
| 65A | Capacitor holder (left) | 1 |
| 66 | M4x16 hexagon socket cylinder head bolt | 2 |
| 67 | M4x20 hexagon socket cylinder head bolt | 4 |
| 68 | M4 external-toothed washer | 1 |
| 69 | M4x6 cross-recessed half-head screw | 1 |
| 70 | M4x20 self-tapping cross-head screw, stainless steel | 4 |
| 71 | M4x25 self-tapping Phillips screw, stainless steel | 3 |
| 72 | Cover for handle type P (right-hand) | 1 |
| 73 | Release switch | 1 |
| 74 | Control cable | 1 |
| 75 | Pressure contact plate | 1 |
| 76 | Self-tapping Phillips screw M4x16 | 2 |
| 77 | Cover for handle type P (left) | 1 |
| 78 | Motor end cover | 1 |
| 79 | LED socket | 1 |
| 80 | Self-tapping Phillips-head screw with round head, M5x25 | 1 |
| 81 | Self-tapping screw with cross-re-cess and round head, M5x20 | 1 |
| 82 | Mains plug (230 V / 3 × 1.5²) | 1 |
| 83 | Portable residual current circuit breaker (PRCD) (230 V) | 1 |

| No. | Description | Qty |
|---|---|---|
| 38 | Tension spring 2.0 × 32.1 × 11.5 | 1 |
| 39 | Spring-loaded disconnect socket | 1 |
| 40 | Water ring bushing Ø28xØ26x9.5 | 2 |
| 41 | Z26 serrated bit, 0.7 mm | 1 |
| 42 | Tapered thread tooth Z26 0.7 mm | 1 |
| 43 | Flat connector 5x5x30 | 2 |
| 44 | Sliding rotary knob, teeth Z45–Z38 | 1 |
| 45 | O-ring Ø85 x 2.5 | 2 |
| 46 | Punching of the outer ring of the HK1010 needle roller bearing | 1 |
| 47 | Centre cover | 1 |
| 48 | Dust-proof skeleton oil seal TC 12x24x7 | 1 |

| No. | Description | Quan-tity |
|---|---|---|
| 84 | Mains cable (230 V / 3 × 1.5²) | 1 |
| 85 | Cover for earth lead | 1 |
| 86 | G3/4 quick-connect coupling | 1 |
| 87 | Dust extraction coupling | 1 |
| 88 | O-ring Ø42x4.0 | 1 |
| 89 | G1/4 quick-connect coupling | 1 |
| 90 | Combination flat washer BS/A12.7 (12.7 x 19 x 1.5) | 2 |
| 91 | Water valve switch (mini valve) | 1 |
| 92 | G1/4" water valve connector | 1 |
| 93 | O-ring Ø16 x 3.1 | 1 |

# 9 EU Declaration of Conformity

The manufacturer/distributor

Kernlochbohrer GmbH
Geigersbühlweg 52
72663 Großbettlingen | Germany

hereby declares that the following product

| | |
|---|---|
| Product name: | **Soft impact core drilling machine** |
| Type: | **SID202/H-Xtrem \| SID202/P-Xtrem** |

complies with all relevant provisions of the applicable legislation (as set out below) – including any amendments in force at the time of this declaration. The manufacturer bears sole responsibility for issuing this Declaration of Conformity. This declaration relates solely to the machine in the condition in which it was placed on the market; parts fitted and/or modifications made subsequently by the end user are not taken into account.

The following legislation has been applied:

Machinery Directive 2006/42/EU (for delivery up to 2027-01-19)

Machinery Regulation (EU) 2023/1230 (for delivery from 2027-01-20)

Electromagnetic Compatibility Directive 2014/30/EU

The following harmonised standards have been applied:

EN ISO 12100:2010

EN 62841-1:2015 + A11:2022

EN 62841-3-6:2014 + A12:2022

EN IEC 55014-1:2021

EN IEC 55014-2:2021

EN IEC 61000-3-2:2019 +A1:2021

EN 61000-3-3: 2013 +A2:2021 +AC:2022-01

Name and address of the person authorised to compile the technical documentation:

Kernlochbohrer GmbH
Geigersbühlweg 52
72663 Großbettlingen | Germany

Großbettlingen, 2026-06-30

Kernlochbohrer GmbH

Guido Pillat

Managing Director / Chief Executive Officer